V. EROKHIN, M. MAKHAN'KO, P. SAMOILENKO

Fundamentals of Thermo-dynamics and Heat Engineering

MIR PUBLISHERS

V. G. EROKHIN, M. G. MAKHAN'KO AND
P. I. SAMOILENKO

Fundamentals of Thermodynamics and Heat Engineering

MIR PUBLISHERS MOSCOW

Translated from Russian by
RAM WADHWA and NATALIA DEINEKO

First published 1986
Revised from the 1980 Russian edition

На английском языке

© Издательство «Машиностроение», 1980
© English translation, Mir Publishers, 1986

Fundamentals of Thermodynamics and Heat Engineering

В. Г. Ерохин,
М. Г. Маханько,
П. И. Самойленко

ОСНОВЫ ТЕРМОДИНАМИКИ И ТЕПЛОТЕХНИКИ

Издательство «Машиностроение»
Москва

CONTENTS

Introduction 9

PART I. FUNDAMENTALS OF THERMODYNAMICS

Chapter 1. Basic Concepts and Definitions 11

1.1. Heat and Work 11
1.2. Thermodynamic System 12
1.3. Parameters of State of a Thermodynamic System 12
1.4. Basic Laws of Ideal Gases 14
1.5. Equation of State for an Ideal Gas 16
1.6. Properties of Real Gases 17

Chapter 2. First Law of Thermodynamics 18

2.1. Thermodynamic Process 18
2.2. First Law of Thermodynamics 19
2.3. Change in the Internal Energy and the Work of a Gas in a Thermodynamic Process 19
2.4. Equation of the First Law of Thermodynamics for a Moving Gas 23

Chapter 3. Heat Capacity of Gases 24

3.1. Basic Concepts. True and Average Specific Heat 24
3.2. Dependence of Specific Heat on Temperature and the Nature of Process 26

Chapter 4. Gas Mixtures 28

4.1. Gas Mixture Composition 28
4.2. Dalton's Law 29
4.3. The Average Molecular Mass and Gas Constant of a Mixture 30
4.4. Specific Heat of a Gas Mixture 31
4.5. Determining Mixture Parameters in Volume Equal to the Sum of the Volumes of the Components 32

Chapter 5. Basic Thermodynamic Processes 34

5.1. Classification of Basic Thermodynamic Processes 34
5.2. Isochoric Process 34
5.3. Isobaric Process 36
5.4. Isothermal Process 37
5.5. Adiabatic Process 38
5.6. Polytropic Process 39

Chapter 6. Second Law of Thermodynamics 43

6.1. Basic Concepts of the Second Law of Thermodynamics 43
6.2. A Cycle of a Heat Engine 44
6.3. Refrigeration Cycle 45
6.4. The Perfect Cycle of a Heat Engine 45
6.5. Perfect Refrigeration Cycle 47

Chapter 7. Entropy 48

7.1. Entropy and Its Variation in Thermodynamic Processes 48
7.2. Entropy and Working Capacity. The Law of Degradation of Entropy 50
7.3. T-s Diagram 52

Chapter 8. Steam 54

8.1. Basic Concepts and p-v Diagram for Steam 54
8.2. State Parameters of Boiling Water and Steam 55
8.3. Heat of Evaporation and Specific Heat of Superheated Steam 57
8.4. Steam Tables and Diagrams 58
8.5. Processes Involving Changes in the State of Steam 59

Chapter 9. Thermodynamics of Moist Air 61

9.1. Moist Air and Its State Parameters 61
9.2. The i-d Diagram for Moist Air 64
9.3. Heat and Mass Transfer Between Moist Air and Water 65
9.4. Mixing of Moist Air Flows 66

Chapter 10. Thermodynamics of Gas and Steam Flows 67

10.1. Gas Velocity and Flow Rate 67
10.2. Critical Flow 69
10.3. Throttling of Gases and Steam 71

PART II. FUNDAMENTALS OF HEAT TRANSFER

Chapter 11. Heat Conduction 73

11.1. Heat Conduction Across a Plane Wall 73
11.2. Heat Conduction Across a Cylindrical Wall 75
11.3. Heat Conduction Across a Spherical Wall 76
11.4. Heat Conduction Through a Circular Rod and a Tube with an Internal Heat Source 77

Chapter 12. Heat Transfer by Convection 78

12.1. Basic Concepts 78
12.2. Similarity of Convective Heat Transfer Processes 80
12.3. Heat Transfer by Free Convection 82
12.4. Heat Transfer by Forced Convection 83

Chapter 13. Boiling and Condensation Heat Transfer 85

13.1. Boiling Heat Transfer 85
13.2. Condensation Heat Transfer 87

Chapter 14. Heat Transfer by Radiation 88

14.1. Basic Concepts and Definitions 88
14.2. Heat Transfer Between Two Bodies by Radiation 89
14.3. Thermal Radiation of Gases 91

Chapter 15. Overall Heat Transfer 92

15.1. Combined Heat Transfer 92
15.2. Overall Heat Transfer Through a Wall 93
15.3. Heat Insulation 96

Chapter 16. Heat Exchangers 98

16.1. Types of Heat Exchangers 98
16.2. Calculation of Heat-exchanger Parameters 99

Chapter 17. Modelling and Experimental Investigation of Heat Exchangers 102

17.1. Formulation of the Problem and Modelling Conditions 102
17.2. Experimental Investigation of Heat Exchangers 104

PART III. FUNDAMENTALS OF HEAT ENGINEERING

Chapter 18. Basic Concepts. Fuel. Combustion. Furnaces 106

18.1. Basic Concepts. Classification of Fuel 106
18.2. Composition of Fuel and Its Characteristics 109
18.3. Heat of Combustion of a Fuel 111
18.4. Combustion of Fuel 113

Chapter 19. Boiler Installations 117

19.1. Basic Elements and Classification 117
19.2. Boiler Units 119
19.3. Furnaces 119
19.4. Steam Generators 129
19.5. Heat Balance Equations and Efficiency of a Steam Generator 143
19.6. Steam Generators Operating on Waste Gases 144
19.7. Hot-water Boilers 153
19.8. Steam-operated Hot-water Boilers 159
19.9. Contact Heaters 161
19.10. Electric Water Heaters and Steam Generators 164

Chapter 20. Steam Power Plants 167

20.1. Basic Concepts. Steam Power Plant Cycles 167
20.2. Methods of Increasing the Economic Efficiency of a Steam Power Plant 172
20.3. Fundamentals of Power-and-heat Supply 174
20.4. The Principle of Operation of a Steam Turbine 175
20.5. Condenser Units for Steam Turbines 181
20.6. Classification of Steam Turbines 182
20.7. Steam Turbine Power Plants 183

Chapter 21. Internal Combustion Engine 192

21.1. The Cycles of Internal Combustion Engine 192
21.2. Operational Principle and Classification of ICE 196
21.3. Heat Balance and Efficiency of ICE 198

Chapter 22. Gas Turbine Plant 199

22.1. Basic Elements and Cycles of Gas Turbine Plants 199
22.2. Schematic Diagram of a Gas Turbine Plant 204
22.3. Cycles of Jet Engines 206
22.4. Fields of Application of Steam Turbine and Gas Turbine Plants 208

Chapter 23. Compression of Gases and Vapours 210

23.1. Basic Concepts 210
23.2. Basic Processes in a One-stage Piston Compressor 210

23.3. Basic Characteristics of a One-stage Piston Compressor 211
23.4. Multi-stage Compression in a Piston Compressor 214
23.5. Rotary Compressors (Blowers) 215
23.6. Vane Compressors 216
23.7. Fans 218

Chapter 24. Development of Modern Thermal Power Plants 220

24.1. Steam-gas Power Plants 220
24.2. Atomic Plants 222
24.3. Method of Direct Conversion of Thermal and Chemical Energy into Electric Energy 225

Chapter 25. Refrigerating Plants and Thermocompressors 229

25.1. Methods of Refrigeration 229
25.2. Cooling Agents 231
25.3. Air Coolers 233
25.4. Vapour Compression Refrigerating Plants 234
25.5. Absorption Refrigerating Machines 236

INTRODUCTION

The idea of heat engineering as a science dealing with the laws and methods of generation and transfer of heat, as well as its conversion into other forms of energy, emerged in the beginning of the 19th century. The great Russian scientist M. V. Lomonosov, who formulated the law of conservation and conversion of energy, made a significant contribution to the materialistic trend in the development of heat engineering.

The Russian mechanical engineer I. I. Polzunov constructed in 1763-65 a heat engine which was original in its construction. The English mechanical engineer James Watt received in 1769 the patent for a steam engine whose principle of operation is the same as for the heat engines used even today. The first internal combustion gas engine was devised in 1860 by the Frenchman Lenoir. After 17 years, a gas engine was constructed, whose principle of operation forms the basis of present-day four-stroke engines. In 1895, the German engineer R. Diesel patented the internal combustion engine that bears his name.

The first patent for a gas turbine was obtained in 1791 by the Englishman Berber, although gas-turbine engines suitable for practical applications appeared only after about 100 years. The first steam turbine was constructed by Laval in 1883 to drive a high-speed separator with a rotational frequency of 30 000 r.p.m.

The theory of thermal processes was perfected together with the development of heat engines. The French engineer S. Carnot published in 1824 a scientific treatise in which he formulated the basic law of heat engineering that defined the conditions for conversion of heat into mechanical work. He also proposed a formula for determining the efficiency of an ideal heat engine and developed the operating scheme for an internal combustion engine.

The works of R. Mayer, J. Joule, R. Clausius, H. Helmholtz and W. Thomson played a significant role in the development of heat engineering. Their works led to the formulation of the first and second laws of thermodynamics, which form the basis for theoretical investigation and practical application of the processes of mutual conversion of heat and work.

The development of the theory of heat engines and heat exchangers is associated with the work of leading Russian heat engineers M. F. Okatov, L. K. Popov, I. A. Vyshnegradskii, G. V. Depp, K. V. Kirsh, V. I. Grinevetskii, L. K. Ramzin, M. V. Kirpichev, A. A. Radtsig, N. I. Belokon' and others. Russian scientists were the first to establish the laws of jet propulsion. The outstanding

Russian scientist K. E. Tsiolkovskii laid the scientific foundation of the theory of jet propulsion.

The use of atomic energy to generate power is also associated with thermal processes. Soviet Union was the first country to harness atomic power for peaceful purposes. The first atomic power plant was constructed in the USSR in 1954, and a wide application of atomic power for heating is in the offing.

Thermal processes are important not only in heat engineering; they play an extremely significant role in quite diverse industrial processes including chemical processes.

An effective use of heat in various branches of industry is impossible without a knowledge of the basic laws of heat engineering and a thorough understanding of the theory of thermal processes.

The rapidly developing chemical industry is one of the largest users of thermal energy. This poses challenging problems before the specialists involved in chemical machine building. The aim of this textbook is to help prepare junior specialists in this field.

Model examples and exercises are not included in this book, since they are contained in the book *Problems on Fundamentals of Hydraulics and Heat Engineering* by the same authors, also being published by MIR.

Part One

FUNDAMENTALS OF THERMODYNAMICS

Chapter One

BASIC CONCEPTS AND DEFINITIONS

1.1. Heat and Work

Energy is the common measure of different forms of motion of matter. The amount of work and heat are the measures of energy transferred to a body. The amount of transferred energy depends on the conditions under which such a process is accomplished. If one body does mechanical work on another body, the increase in the energy of the latter is equal to the amount of work done on it. The work done by a body is assumed to be positive while the work done on a body is considered to be negative. In engineering thermodynamics, work is measured in joules.

The transfer of energy to a body by doing work on it is always associated with a motion of the body or its particles. If one body transfers energy to another body on coming in thermal contact with it, the heat absorbed by the second body is assumed to be positive while the heat released by the first body is given the negative sign. The unit of measurement of heat is a joule.

According to the kinetic theory of matter, heat is a form in which the energy of motion of particles constituting a body is manifested. Hence the transfer of heat from particles of one body to another involves an exchange of energy, i.e. the work done by the atoms and molecules of one body on the atoms and molecules of the other body.

Unlike heat transfer, mechanical work is an ordered form of energy transfer.

It is possible to convert one form of work into another. A conversion of organized (mechanical) work into disorganized energy (heat) can be made to any extent and a complete conversion of mechanical work into heat is possible. The reverse process involving the conversion of disorganized work into organized work, however, is possible only under certain conditions. This constitutes the qualitative difference between the terms "heat" and "work".

1.2. Thermodynamic System

The aggregate of bodies which exchange energy between themselves, with other bodies, or with the surrounding medium forms a *thermodynamic system.* A system which does not exchange matter with other bodies is called a *closed system.* An example of a closed system is a gas contained in a cylinder with a piston.

A system which exchanges matter with other bodies is called an *open system.* An example of an open system is the flow of working fluid in turbines and turbocompressors, as well as in piston-type engines during the injection and discharge processes. A system which does not exchange mass or energy with other systems is called an *isolated system.*

A thermodynamic system is called *uniform* if all its components have identical properties. If different parts of the system have different properties and there are interfaces, the system is called *heterogeneous.* In the absence of interfaces, the system is called *homogeneous.* A reservoir containing a boiling liquid and saturated vapour above it is an example of a heterogeneous system. A mixture of ice and water also constitutes a heterogeneous system. Individual components of a heterogeneous system, which are separated by interfaces, are called *phases.* A heterogeneous system can also contain three phases (when solid, liquid and gaseous phases coexist in the system).

The state of a system where the values of the parameters characterizing it do not vary in time is called the *steady state.* If the values of the parameters characterizing the state of a system vary with time, the state is called a *transient state.*

All processes in heat engineering involve a working fluid. Processes involving a change in the volume of the working fluid (expansion or compression) have to be carried out in order to do work in heat engines at the expense of heat. Hence the working fluid in heat engines is a gas or a vapour, capable of changing its volume.

1.3. Parameters of State of a Thermodynamic System

The quantities characterizing the state of a thermodynamic system are called the *state parameters.* State parameters which do not depend on the mass of a thermodynamic system are called *intensive thermodynamic parameters.* Temperature, pressure, and concentration of one substance in another are examples of intensive thermodynamic parameters. State parameters whose values are proportional to the mass of the given thermodynamic system and are equal to the sums of the values of the corresponding parameters for individual components of the system are called *extensive thermodynamic parameters.* Examples of extensive thermodynamic parameters are volume, internal energy, enthalpy, entropy, etc.

The physical state of a homogeneous body is uniquely described by three basic state parameters, viz. the temperature, pressure, and specific volume.

Temperature characterizes the degree of hotness of a body and is measured in degrees on different temperature scales. Three temperature scales are used at present:

the absolute or thermodynamic temperature scale, K;

the Celsius or centigrade scale, °C; and

the Fahrenheit scale, °F.

In the international system (SI) of units, temperature is measured in kelvins (K).

The absolute or thermodynamic scale is established by taking as fixed points the absolute zero and the triple point of water. *A triple point* is the state of a substance in which all its three phases can coexist (for water, these phases are water, vapour and ice at $t = 0.01$ °C. and $p = 610.755$ Pa. The temperature of fusion of ice at a pressure $p = 101\ 325$ Pa is 273.15 °C

The value of one division on the Celsius scale coincides with one division on the absolute temperature scale (1 K = 1 °C). The numerical values of temperatures determined on these two scales are connected through the relation T K $= t$ °C $+ 273.15$.

On the Fahrenheit scale, which is used in the UK and the USA, the temperature of fusion of ice and the boiling point of water under normal physical conditions are equal to 32 and 212 °F, respectively. Consequently, t °C $= (5/9)$ (t °F $- 32$).

Pressure is measured in pascals. One pascal is equal to the pressure exerted by a force of 1 N on an area of 1 m^2, i.e. 1 Pa = 1 N/m^2. Since this unit of pressure is very small, larger units are used by multiplying this unit by factors of 10.

Out-of-system units of pressure are an atmosphere (1 at = 1 kg/cm^2) and a bar (1 bar = 10^5 N/m^2). The pressure can be measured by the height of a liquid column which is in equilibrium with the gas pressure, i.e. in mm of mercury or aqueous column.

The following are the relations between the units of measurement of pressure:

1 bar = 10^5 N/m^2 = 1.01972 kg/cm^2 = 750.06 mm Hg = 10 197 mm H_2O.

1 at. = 1 kg/cm^2 = 735.6 mm Hg = 10 000 mm H_2O = 98 066.5 N/m^2.

The physical conditions corresponding to $t = 0$ °C and p_n = 760 mm Hg = 101 325 N/m^2 are called *normal conditions*.

Manometers and vacuummeters are employed for measuring pressure in engineering. If the absolute pressure p_{abs} of a gas in a reservoir is higher than the ambient pressure p_{bar} of the surrounding medium, the manometer will measure the excess pressure, or the manometer pressure p_{man}, which is equal to the difference ($p_{abs} - p_{bar}$).

If the gas pressure p_{abs} in a reservoir is less than the ambient pressure p_{bar}, the vacuummeter measures the rarefaction, or the vacuum p_{vac}, whose value is equal to $(p_{bar} - p_{abs})$.

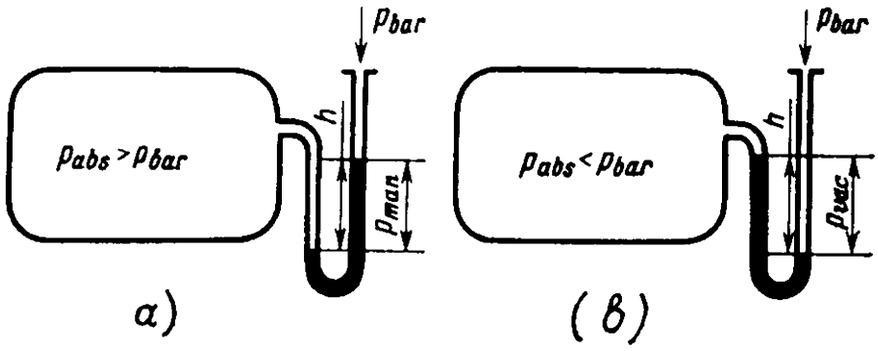

Fig. 1. Measurement of pressure:
(*a*) excess pressure; (*b*) rarefaction.

Thus, the absolute pressure is determined from the readings of instruments by taking into account the following relations:

$$p_{abs} > p_{bar};\ p_{abs} = p_{bar} + p_{man},$$

$$p_{abs} < p_{bar};\ p_{abs} = p_{bar} - p_{vac}.$$

The excess pressure p_{man} or the rarefaction p_{vac} can be measured with the help of a liquid column manometer (Fig. 1):

$$p_{man} = p_{abs} - p_{bar} = g\rho h,$$

$$p_{vac} = p_{bar} - p_{abs} = g\rho h,$$

where g, ρ and h are the acceleration due to gravity, the density of the liquid in the manometer and the difference in the levels of liquid in the instrument respectively.

If the height of the liquid column is measured in meters, p_{man} or p_{vac} are measured in pascals.

The *specific volume* v is the volume of a unit mass and is equal to the ratio of the total volume V of a body and its mass m:

$$v = V/m.$$

The specific volume is a quantity reciprocal to the density:

$$\rho = 1/v.$$

1.4. Basic Laws of Ideal Gases

All working fluids involve randomly moving molecules between which forces of attraction or repulsion exist. The sign of a force of molecular interaction is determined by the distance between the molecules. It is difficult to establish a law describing the behaviour of real gases in view of the fact that the nature of forces of molecular

interaction has not been thoroughly investigated. Hence as a working fluid in thermodynamics we consider a gas in which the forces of molecular interaction are absent and the volume of the molecules is equal to zero. Such a gas is called an *ideal gas*.

At low pressures and relatively high temperatures, when the intermolecular distances in a real gas are significant and the forces of molecular interaction (attraction) are small, the properties of real gases are close to the properties of an ideal gas. This led to an experimental establishment of the basic laws governing the behaviour of ideal gases.

Boyle's Law. In 1662 Boyle (and subsequently Mariotte in 1676) discovered that at a constant temperature T, the product of the absolute pressure of a gas and its specific volume is a constant quantity, i.e.

$$pv = \text{const for } T = \text{const}.$$

This means that the following relation is valid for any two states of a gas at a constant temperature:

$$p_1 v_1 = p_2 v_2.$$

Charles' (Gay-Lussac's) Law. Gay-Lussac established experimentally in 1802 that at a constant pressure, the ratio of the specific volume of a gas to its absolute temperature is constant, i.e.

$$v/T = \text{const for } p = \text{const}.$$

This leads to a numerical relation which is valid for any two states at a constant pressure:

$$v_1/T_1 = v_2/T_2.$$

As a corollary of these two laws, we can formulate a third law, which is called **Charles' law**. According to this law, the ratio of the absolute pressure of a gas to its absolute temperature at a constant volume is constant, i.e.

$$p/T = \text{const for } v = \text{const}.$$

Consequently,

$$p_1/T_1 = p_2/T_2.$$

Avogadro's Law. The following hypothesis was put forward by Avogadro in 1811: equal volumes of different gases under identical conditions contain the same number of molecules.

This hypothesis, which became a law after it was proved, leads to an important result according to which the product of the molecular mass of a gas and its specific volume is constant for different gases

under identical physical conditions, i.e.

$$\mu v = \text{const.}$$

The product $\mu v = \bar{v}$ is the volume of one mole of a gas. Under normal physical conditions, it is equal to 22.4 m^3 for all gases.

1.5. Equation of State for an Ideal Gas

A comparison of Boyle's and Gay-Lussac's laws leads to the generalized Boyle and Gay-Lussac law

$$pv/T = R,$$

where R is a characteristic constant for an ideal gas.

This equation, first obtained by Clapeyron in 1834, is called the *equation of state for an ideal gas, or Clapeyron's equation.*

For 1 kg of a gas,

$$pv = RT. \tag{1.1}$$

For an arbitrary amount m of a gas, we have

$$pV = mRT, \tag{1.2}$$

where $V = vm$.

Mendeleev was the first to propose the following characteristic equation for one mole of a gas:

$$p\mu v = \mu RT \text{ or } p\bar{v} = \mu RT,$$

where $\bar{v} = \mu v$ is the volume of one mole.

Writing the characteristic equation under normal conditions, we obtain

$$101\,325 \times 22.4 = \mu R \times 273.15.$$

If follows from this equation that $\mu R = 8314.3$ J/(mole·deg). This constant is called the *universal gas constant.* The gas constant for any gas is equal to

$$R = 8314.3/\mu. \tag{1.3}$$

Consequently, the gas constant has the dimensions of specific work (the work per kg of the gas).

The volume V of the gas under any physical conditions (p and T) can be reduced to normal physical conditions p_n and T_n as follows:

$$V_n = (VpT_n)/p_nT.$$

1.6. Properties of Real Gases

Real gases differ from an ideal gas in the size of their molecules and the presence of interaction between molecules. Lomonosov was the first to point out the deviation in the properties of a real gas from those of an ideal gas. This deviation increases with decreasing temperature and increasing pressure, since the forces of molecular interaction under these conditions and the intrinsic volume of molecules considerably affect the relation beween the state parameters.

Van der Waals' equation of state takes into account the properties of real gases in the most distinct way:

$$(p + a/v^2)(v - b) = RT,$$

where a and b are coefficients which have constant values for a given substance.

Comparing this equation with Eq. (1.1), we find that the Van der Waals equation contains two additional terms, a/v^2 and b. The physical meaning of these terms becomes clear if we write this equation in the form

$$p = RT/(v - b) - a/v^2.$$

The term a/v^2 takes into account the force of interaction between molecules, which reduces the effect of the external pressure of the gas and is proportional to the square of the number of molecules (and hence to the square of the gas density ρ) and inversely proportional to v^2.

The term b takes into consideration the volume of the molecules themselves. The higher the value of b, the smaller the distance between molecules and the larger the number of molecular collisions. Consequently, the external pressure P will also be higher. The Van der Waals equation should not be used for practical calculations, since the results obtained with the help of Eq. (1.2) differ from experimental results.

The most exact equation of state for real gases available at present was proposed by Soviet scientists Vukalovich and Novikov. This equation takes into account not only the forces of molecular interaction and the influence of the volume of molecules but also their association.

Test Questions

1. What is the qualitative difference between the concepts of "heat" and "work"?
2. What is a thermodynamic system?
3. What thermodynamic systems do you know?

4. Define a homogeneous and a heterogeneous thermodynamic system.
5. What is meant by the steady and transient states of a thermodynamic system?
6. What is a working fluid?
7. What is the difference between intensive and extensive state parameters?
8. Name the basic state parameters of a thermodynamic system.
9. What are the dimensions of the basic state parameters?
10. How is the absolute temperature of a gas related to the temperature in degrees Celsius?
11. Define the absolute pressure of a gas. When is this pressure higher or lower than the barometric pressure?
12. Formulate the basic laws of ideal gases.
13. What are the numerical value and dimensions of the universal gas constant?
14. Under what conditions are the properties of a real gas close to those of an ideal gas?
15. How are the properties of a real gas taken into account in the Van der Waals equation of state?
16. Why is the gas constant μR called universal?

Chapter Two

THE FIRST LAW OF THERMODYNAMICS

2.1. Thermodynamic Process

The combination of successive states of a working fluid during its interaction with the surroundings is called a *thermodynamic process*. A thermodynamic process must be an equilibrium process in order that the equation of state could be applied to any instantaneous state of the working fluid during this process. In other words, the process must involve infinitesimally small differences in pressure and temperature within the working fluid, as well as between the working fluid and the surroundings. The process must occur infinitely slowly so that the equilibrium state can be reached. Since all real processes take place under finite pressure and temperature differences, they are all nonequilibrium processes.

Reversible thermodynamic processes are those which can proceed in the forward (for example, expansion) and reverse (compression) directions through the same sequence of intermediate states so that not only the working fluid, but also the surroundings return to the

nitial state. A reversible process must be in equilibrium and take place without friction or vortex formation so that work is not transformed irreversibly into heat. Since all processes in nature are nonequilibrium processes, they are also irreversible.

2.2. The First Law of Thermodynamics

The law of conservation and conversion of energy is one of the basic laws of nature. It was first formulated by M. V. Lomonosov in the middle of the 19th century. Significant contributions to the development and substantiation of this law were made by Joule and Mayer, who established the equivalence of heat and work, and determined the value of thermal equivalent of work.

The first law of thermodynamics is a particular case of the law of conservation and conversion of energy as applied to the processes of mutual conversion of different kinds of energy, including heat and work. This law states that the energy W of an isolated system in all its kinds remains constant and that the mutual conversion of heat Q and work L takes place according to quite definite relationships, i.e. heat and work are equivalent or, in other words,

$$W = \text{const}, \quad dW = 0, \quad Q = AL,$$

where A is the thermal equivalent of work.

If heat and work are measured in identical units (in joules), A is a dimensionless quantity equal to unity.

When a thermodynamic process is considered in the most general case, the heat Q supplied to the working fluid is spent in changing the internal energy of the body by ΔU and in doing mechanical work L. Hence the mathematical expression for the first law of thermodynamics for an arbitrary amount of working fluid is given as follows:

$$Q = \Delta U + L. \tag{2.1}$$

For 1 kg of the working fluid, we have

$$q = \Delta u + l.$$

In differential form, this law can be written as follows:

$$dq = du + dl.$$

2.3. Change in the Internal Energy and the Work of a Gas in a Thermodynamic Process

The internal energy of a body is the sum of the kinetic and potential energies of its atoms and molecules. The former depends on the velocity of motion and the mass of particles, while the latter is determined by their mutual arrangement and the forces of interaction between them.

The internal energy u of a real gas is a function of state of the gas, i.e. a function of its state parameters. Therefore, its change in a thermodynamic process does not depend on the nature of the process and is determined only by the initial and final values of the state parameters, i.e.

$$\Delta u = u_2 - u_1 = f(p_2;\ v_2;\ T_2) - f(p_1;\ v_1;\ T_1).$$

Using Eq. (1.1), any parameter can be expressed in terms of the two remaining parameters. Consequently, a change in the internal energy can be represented by a function of any two state parameters.

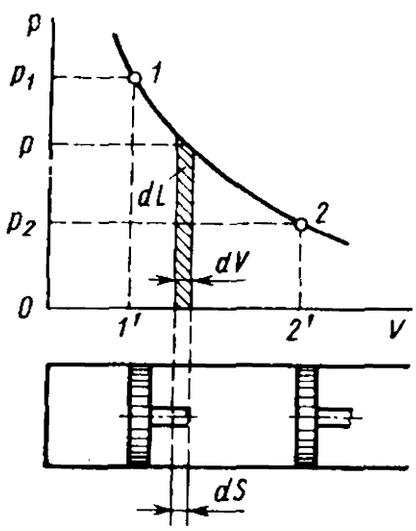

Fig. 2. Graphical method for calculating the mechanical work of a gas.

The internal energy of an ideal gas is a function of the gas temperature and is independent of pressure: $\Delta u = \varphi(T_2) - \varphi(T_1)$.

The change in the internal energy of 1 kg of an ideal gas is given by

$$\Delta u = u_2 - u_1 = c_v(T_2 - T_1), \tag{2.2}$$

where c_v is the specific heat capacity of the gas at $v = \text{const}$. For an elementary process, we have

$$du = c_v dT. \tag{2.3}$$

The mechanical work L of a gas depends on the nature of a process. Let us consider the work of an arbitrary amount m (kg) of a gas in a cylinder, performed in displacing a piston of area f through a distance dS (see Fig. 2). Since dS is small, we shall assume that during this process of an elementary displacement of the piston the pressure is constant and equal to p. Then the absolute work done by the gas upon expansion, i.e. the work done by the force $F = pf$ in order to displace the piston, is equal to $dL = F\,dS = pf\,dS$. The change in the cylinder volume is $dV = f\,dS$, and hence $dL = p\,dV$.

Graphically, the elementary work dL (see Fig. 2) corresponds to the hatched area.

The elementary mechanical work of a gas per kilogram of the gas is given by

$$dl = p\,dv. \tag{2.4}$$

If the value of p is varying, then the total work done on the segment 1-2 of the process graphically shown in Fig. 2 can be calculated

as follows:

$$L = \int_{V_1}^{V_2} p\, dV.$$

On the p-v diagram, the work L on the segment 1-2 corresponds to the area 1-2-2′-1′ below the curve describing the process.

For 1 kg of a gas, we have

$$l = \int_{v_1}^{v_2} p\, dv. \tag{2.5}$$

If the surrounding medium exerts a pressure on the outer surface of the piston during the expansion of the gas in the cylinder, the useful work of the gas is less by an amount L_r due to the resistance of the surrounding medium:

$$L_r = p_s \Delta V = p_s (V_2 - V_1)$$

or, for 1 kg of a gas,

$$l_r = p_s (v_2 - v_1),$$

where p_s is the pressure of the surrounding medium on the outer surface of the piston.

Thus, the useful work of the gas is

$$L_u = \int_{V_1}^{V_2} p\, dV - p_s (V_2 - V_1) \quad \text{or}$$

$$l_u = \int_{V_1}^{V_2} p\, dv - p_s (v_2 - v_1).$$

It should be borne in mind that the formulas obtained for the mechanical work are valid only for equilibrium and reversible processes. The area below the curve describing a process on the p-v diagram corresponds to the work of the process only for reversible processes. In irreversible processes, a part of the work is converted into heat, and the work done in an irreversible process cannot be determined with the help of the formulas derived above. The area below the curve describing the process on the p-v diagram does not correspond to the actual work.

Using expression (2.4) for the elementary mechanical work of a gas, we can obtain the following expression for the first law of thermodynamics in differential form:

$$dq = du + dl = c_v dT + p\, dv. \tag{2.6}$$

For a finite process involving 1 kg of a gas, we have

$$q = \Delta u + l = c_v (T_2 - T_1) + \int_{V_1}^{V_2} p\, dv. \tag{2.7}$$

If we consider that the differential expression $p\, dV$ for work can be written as the difference

$$p\, dv = d(pv) - v\, dp,$$

then Eq. (2.6) assumes the form

$$dq = du + d(pv) - v\, dp = d(u + pv) - v\, dp.$$

The sum of the internal energy u and the product pv is a function of state called the *enthalpy*:

$$i = u + pv, \tag{2.8}$$

where pv is the work of thrust, which is numerically equal to the work required to "thrust" the volume v into the region with pressure p. For example, the work performed in delivering 1 kg of water with specific volume v_0 to a boiler with pressure p is equal to pv_0. The quantity pv_0 is sometimes called the *potential energy of the volume.*

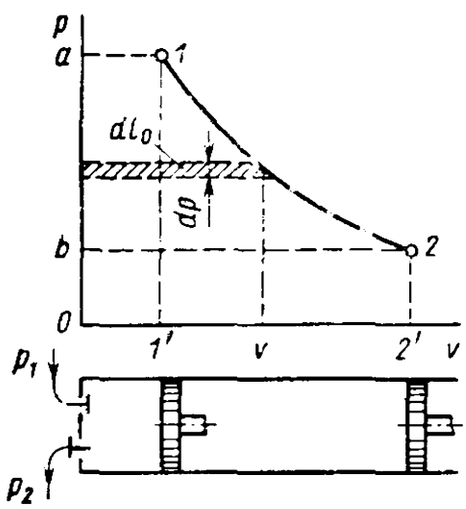

Fig. 3. Graphical method of calculating the available work of a gas for a decreasing pressure.

Thus, taking into account (2.8), the differential expression of the first law of thermodynamics is

$$dq = di - v\, dp = c_p dT - v\, dp.$$

In comparison with (2.6), this expression is called the *second form of the differential expression of the first law of thermodynamics.* The product $v\, dp$ is a certain elementary work which is represented by the hatched area in Fig. 3. In contrast to the mechanical work of a gas, this work is called the *available work.* The available work in a finite process 1-2 for an arbitrary mass of a gas is given by

$$L_0 = -\int_{p_1}^{p_2} V\, dp.$$

For 1 kg of a gas we have

$$l_0 = -\int_{p_1}^{p_2} v\, dp.$$

The minus sign is taken in order to obtain positive work in a process involving a decrease in pressure ($dp < 0$).

The available work l_0 of a gas is the work gained (or spent) when a mass of a gas is brought into the region with a lower (or higher) pressure. It is the sum of three types of work. Figure 3 shows the graphical method of determining the available work of a gas for a decreasing pressure:

$$l_0 = \text{area } a\text{-}1\text{-}2\text{-}b = \text{area } a\text{-}1\text{-}1'\text{-}0 + \text{area } 1\text{-}2\text{-}2'\text{-}1' - \text{area } 2\text{-}b\text{-}0\text{-}2'$$

$$= p_1v_1 + \int_{v_1}^{v_2} p\,dv - p_2v_2 = p_1v_1 - p_2v_2 + l.$$

The area a-1-1′-0 corresponds to the work of the process of filling a cylinder with a gas under pressure p_1. The work corresponding to the area 2-b-0-2′ characterizes the process of discharging the gas from the cylinder when mechanical work is accomplished in the process of expansion.

The combination of the processes considered above corresponds to the working process of a gas turbine doing a useful work during the expansion of a gas. The reverse sequence of the processes, i.e. the filling of a cylinder under a low pressure followed by the compression and discharge of the compressed gas from the cylinder at a higher pressure, corresponds to the working process in compressors.

Thus, the second expression of the first law of thermodynamics for a finite process has the form

$$q = \Delta i + l_0 = i_2 - i_1 - \int_{p_1}^{p_2} v\,dp. \tag{2.9}$$

2.4. Equation of the First Law of Thermodynamics for a Moving Gas

The mathematical expression (2.1) of the first law of thermodynamics is valid for processes in which a gas is not displaced in space.

When a gas moves, the heat supplied to it in the most general case will be spent to change its internal and kinetic energies, as well as to do work against external forces. Therefore, the first law of thermodynamics for 1 kg of a flowing gas can be written in differential form as follows:

$$dq = du + dl_{\text{thr}} + d\,(c^2/2),$$

where dl_{thr} is the work done against external forces in the process under consideration, dq is the amount of heat supplied in the process, and $d\,(c^2/2)$ is the change in the kinetic energy.

The work of thrust in an elementary process is $dl_{\text{thr}} = d\,(pv)$. The sum $du + d(pv) = di$. Consequently,

$$dq = di + d(c^2/2).$$

For an ideal gas, we have

$$dq = c_p dT + d(c^2/2).$$

The amount of heat supplied in a finite process is given by

$$q = i_2 - i_1 + 0.5(c_2^2 - c_1^2). \tag{2.10}$$

For an ideal gas, this equation becomes

$$q = c_p\,(T_2 - T_1) + 0.5(c_2^2 - c_1^2).$$

It follows from (2.10) that if the gas flows at a constant velocity, i.e. $c_2 = c_1$, the heat supplied to it will be spent to increase its enthalpy since in this case $q = i_2 - i_1$.

For an adiabatic gas flow, when $q = 0$, the change in the kinetic energy is equal to $0.5(c_2^2 - c_1^2) = i_1 - i_2$.

Test Questions

1. Which thermodynamic process can be considered as an equilibrium and which as a reversible process?
2. What does the first law of thermodynamics establish?
3. What do we mean by the internal energy of a gas and how is its change in a thermodynamic process determined?
4. Which state parameters determine the internal energy of a real and an ideal gas?
5. How is the mechanical work done in a reversible thermodynamic process determined analytically and graphically?
6. Give the definition of the available work.
7. What is the enthalpy and how is its variation in a thermodynamic process determined for an ideal gas?
8. Write the mathematical expressions of the first law of thermodynamics for a gas at rest and a flowing gas.

Chapter Three

HEAT CAPACITY OF GASES

3.1. Basic Concepts. True and Average Specific Heat

Heat capacity of a body is the amount of heat required to raise its temperature by 1 K. The amount of heat spent to increase the temperature of a unit of mass of a substance by 1 K is called the *specific*

heat capacity. Several kinds of the heat capacities are distinguished: heat capacity per unit mass (per kilogram) or specific heat capacity c, heat capacity per unit volume C (per normal cubic meter), and molar heat capacity μc (per mole).

The relation between specific heat capacities is as follows

$$c = \mu c/\mu = C \times 22.4/\mu, \tag{3.1}$$

where μ is the molecular mass of a mixture of gases.

The specific heat capacity is usually called simply *specific heat*. The specific heat of a working fluid depends on its nature, temperature and the nature of the process in which heat is supplied or removed. Specific heat of gases increases with temperature. If a gas is heated from t_1°C to t_2°C, and the amount of heat spent for heating 1 kg of the gas is equal to q kJ, the average specific heat of the gas in the temperature interval under consideration is

$$c_m = c\Big|_{t_1}^{t_2} = q/(t_2 - t_1).$$

If we know the average specific heat in the temperature intervals $(0, t_1)$ and $(0, t_2)$, the average specific heat in the temperature interval (t_1, t_2) is given by

$$c\Big|_{t_1}^{t_2} = \left(c\Big|_0^{t_2} t_2 - c\Big|_0^{t_1} t_1\right)\Big/(t_2 - t_1). \tag{3.2}$$

The products $c\Big|_0^{t_1} t_1$ and $c\Big|_0^{t_2} t_2$ represent the amounts of heat required for heating the body from 0° to t_1 and t_2 respectively. The difference in these amounts of heat is the heat required to raise the body temperature from t_1 to t_2. If we divide this amount of heat by the temperature difference $t_2 - t_1$, we obtain the *average specific heat* of the body in the temperature interval under consideration. It should be taken into account that the specific heat of the gas in the temperature interval from t_1 to t_2 (for $t_1 > 0$) will be larger than

$$c\Big|_0^{t_1} t_1 \text{ and } c\Big|_0^{t_2} t_2.$$

The specific heat corresponding to a definite temperature is called the *true specific heat*. The true specific heat is equal to the limit to which the average specific heat tends as the temperature interval (t_1, t_2) decreases indefinitely.

Table 1 can be used for estimating specific heat of gases if the temperature dependence of specific heat is discarded.

Table 1

Gas	μc_v	μc_p	μc_v	μc_p
	kJ/(mole·K)		kcal/(mole·K)	
Monoatomic	12.48	20.80	3	5
Diatomic	20.80	29.10	5	7
Triatomic and polyatomic	29.1	37.40	7	9

3.2. Dependence of Specific Heat on Temperature and the Nature of Process

The temperature dependence of specific heat of a gas can be described by the following equation

$$c = a + bt + dt^2 + \ldots,$$

where a, b, and d are constant coefficients taking into account the physical properties of the gas.

For diatomic gases, the dependence $c = a + bt$ can be used to a sufficiently high degree of accuracy.

If the true specific heat is given by $c = a + bt + dt^2$, the average specific heat in the temperature interval (t_1, t_2) has the form

$$c\Big|_{t_1}^{t_2} = a + (b/2)(t_1 + t_2) + (d/3)(t_1^2 + t_1 t_2 + t_2^2).$$

If $t_1 = 0$, we get

$$c\Big|_{0}^{t} = a + (b/2)\,t + (d/3)\,t^2.$$

Specific heat depends on the nature of the process. Of special importance are the specific heat c_p of a gas at constant pressure (in isobaric processes) and c_v at constant volume (in isochoric processes). The value of c_v is less than c_p since when a body is heated in an isochoric process, the heat is spent only for increasing its temperature. In isobaric heating, the gas expands and does work.

The heat c_p required to raise the temperature of 1 kg of a gas by 1 K at constant pressure is larger than c_v by the amount of work of expansion, which is equal to the gas constant R. The specific heats

are related through the Mayer equation

$$c_p = c_v + R. \tag{3.3}$$

For molar heat capacities, the Mayer equation has the form

$$\mu c_p - \mu c_v = 8314.3.$$

The ratio of specific heats c_p and c_v for all gases is greater than unity:

$$c_p/c_v = k, \tag{3.4}$$

where k is the adiabatic exponent.

For monoatomic gases, $k = 5/3$, for diatomic gases $k = 7/5$, while for triatomic gases $k = 9/7$.

The adiabatic exponent k

$$k = c_p/c_v = (c_v + R)/c_v = 1 + R/c_v$$

varies with temperature. Since R is constant and c_v increases with temperature, k clearly decreases. This should be taken into consideration in calculations involving temperature dependence of specific heat.

Simultaneously solving Eqs. (3.3) and (3.4) for c_v and c_p, we obtain

$$c_v = R/(k-1) \text{ and } c_p = kR/(k-1). \tag{3.5}$$

Accordingly, the molar heat capacities are given by

$$\mu c_v = \mu R/(k-1) = 8314.3/(k-1) \text{ and } \mu c_p = 8314.3k/(k-1).$$

Consequently, molar heat capacities for gases of the same atomicity are equal.

The amount of heat supplied to or liberated by a body. The amount of heat supplied to (or liberated by) a body is determined with the help of the average specific heat:

$$Q = mc\Big|_{t_1}^{t_2}(t_2 - t_1) = V_n C\Big|_{t_1}^{t_2}(t_2 - t_1) = 22.4MC\Big|_{t_1}^{t_2}(t_2 - t_1),$$

where m is the mass, V_n is the volume under normal conditions and M is the number of moles.

If the heat supplied to (or removed from) a body is known and its initial temperature t_1 is specified, the final temperature of the body will be

$$t_2 = t_1 + Q\Big/\left(mc\Big|_{t_1}^{t_2}\right). \tag{3.6}$$

Since t_2 is determined from the quantity $c\Big|_{t_1}^{t_2}$ which depends on t_2, the problem can be solved by the method of successive approxi-

mations. We should take a tentative value of t_2 and then determine $c\Big|_{t_1}^{t_2}$ from t_1 and t_2 with the help of the tables of average specific heats through formula (3.2). Then the value of t_2 should be determined by (3.6). If the calculated value of t_2 is close to the chosen value, the problem is considered to be solved. If t_2 differs considerably from the chosen value, another value of t_2 should be taken and the calculation should be repeated.

Test Questions

1. Define heat capacities for different units of the amount of substance.
2. What is the temperature dependence of the specific heat of gases?
3. How can the average specific heat be determined if the temperature dependence of the true specific heat is known?
4. How can the average specific heat be determined in the temperature interval (t_1, t_2) if the average values of the specific heat are known in the intervals $(0, t_1)$ and $(0, t_2)$?
5. Why is c_p greater than c_v?
6. What are the ratio and difference of specific heats c_p and c_v equal to?
7. What is the difference between molar heat capacities μc_p and μc_v equal to?
8. How can the final temperature of a gas being heated or cooled be determined if its initial temperature and the amount of heat supplied (or removed) are known?

Chapter Four

GAS MIXTURES

4.1. Gas Mixture Composition

The working fluid in heat engines, refrigerators, compressors and other units used in heat engineering is a mixture of gases whose composition can be given as composition by mass:

in absolute amounts

$$m = m_1 + m_2 + \ldots + m_n,$$

where m_1, m_2, etc. are the masses of the gases being mixed,

in relative fractions

$$1 = m_1/m + m_2/m + \ldots + m_n/m = q_1 + q_2 + \ldots + q_n,$$

i.e.

$$\sum_{i=1}^{n} q_i = 1, \tag{4.1}$$

where q_i is the mass fraction of an individual mixture component. It can be also given as *composition by volume*:

in absolute amounts

$$V = V_1 + V_2 + \ldots + V_n,$$

where V_1, V_2, etc. are the volumes of individual components under similar physical conditions,

in relative fractions

$$1 = V_1/V + V_2/V + \ldots + V_n/V = r_1 + r_2 + \ldots \quad r_n$$

or

$$\sum_{i=1}^{n} r_i = 1, \tag{4.2}$$

where r_i is the volume fraction of an individual mixture component.

The volumes V_1, V_2, . . ., V_n, determined at the total pressure and temperature of the mixture, are called the *partial volumes*.

The mixture composition can also be given by the number of moles M as the sum of the number of moles M_i of its individual components. The representation of the mixture composition through the number of moles corresponds to the composition by volume since the molar fraction of a component is equal to its volume fraction.

4.2. Dalton's Law

The basic physical law that determines the state of a gas mixture is Dalton's law, according to which the pressure in a mixture of gases in the absence of chemical interaction is separately equal to the sum of the pressures of individual components occupying separately the entire volume V of the mixture at the temperature T of the mixture. The pressure p_i of an individual mixture component is called the *partial pressure*. The total pressure p of the mixture is equal to the sum of partial pressures:

$$p = p_1 + p_2 + \ldots + p_n = \sum_{i=1}^{n} p_i.$$

According to Eq. (1.2), the following relation is valid for an individual component in the total volume of the mixture:

$$p_i V = m_i R_i T,$$

where m_i and R_i are the mass and the gas constant of this component.

If we place an individual mixture component into the volume V_i in which the pressure and temperature of the component would be equal to the temperature and pressure of the mixture, then

$$pV_i = m_i R_i T.$$

Volume V_i is called the *partial volume*.

It follows from the last two equations that

$$p_i V = V_i p,$$

and hence the partial pressure of an individual component is given by

$$p_i = pV_i/V = pr_i. \tag{4.3}$$

4.3. The Average Molecular Mass and Gas Constant of a Mixture

The mass and volume fractions of the mixture are related through the following expression:

$$g_i = m_i/m = V_i\rho/V\rho = r_i\rho_i/\rho.$$

Consequently,

$$g_i = r_i\rho_i/\rho \text{ and } r_i = g_i\rho/\rho_i.$$

In accordance with Avogadro's law, $\mu v = \text{const}$ or $\mu/\rho = \text{const}$, and hence

$$\mu/\rho = \mu_i\rho_i \text{ or } \rho_i/\rho = \mu_i/\mu.$$

Therefore,

$$g_i = r_i\mu_i/\mu \text{ and } r_i = g_i\mu/\mu_i. \tag{4.4}$$

Summing up these equalities from 1 to n and considering that $\sum_{i=1}^{n} g_i = 1$ and $\sum_{i=1}^{n} r_i = 1$, we obtain the following expressions for the molecular mass:

$$\mu = \sum_{i=1}^{n} r_i\mu_i \text{ and } \mu = \frac{1}{\sum_{i=1}^{n} g_i/\mu_i}. \tag{4.5}$$

This formula can be used for determining the average molecular mass of a mixture. If we know the molecular mass of a mixture, using

formula (4.4) we can calculate the composition by volume from the composition by mass, and vice versa.

The recalculation from the composition by mass to the composition by volume is made by the formula

$$r_i = g_i\mu/\mu_i = (g_i/\mu_i)/\sum_{i=1}^{n} g_i/\mu_i,$$

while the recalculation from the composition by volume to the composition by mass is performed by the formula

$$g_i = r_i\mu_i/\mu = r_i\mu_i/\sum_{i=1}^{n} r_i\mu_i.$$

The gas constant of a mixture can be determined from the mixture composition and the gas constants of individual components. Since μR = const (universal gas constant), $\mu_i R_i = \mu R$ and $\mu_i/\mu = R/R_i$ or $\mu/\mu_i = R_i/R$.

This allows us to write expressions (4.4) in the following form:

$$g_i = r_i R/R_i \quad \text{and} \quad r_i = g_i R_i/R.$$

Summing up the right- and left-hand sides of these expressions from 1 to n, we obtain

$$R = 1/(\sum_{i=1}^{n} r_i/R_i) \quad \text{and} \quad R = \sum_{i=1}^{n} g_i R_i.$$

The gas constant of a mixture can be determined by the formula which is valid for an individual component, using the value of the molecular mass of the mixture:

$$R = 8314.3/\mu.$$

4.4. Specific Heat of a Gas Mixture

Specific heat of a gas mixture can be obtained from its composition. The specific heat of a mixture is given by

$$c = g_1c_1 + g_2c_2 + \ldots + g_nc_n = \sum_{i=1}^{n} g_ic_i,$$

where $c_1, c_2, \ldots, c_n$ are the specific heats of individual components and $g_1, g_2, \ldots, g_n$ are the mass fractions of the components.

The heat capacity per unit volume of the mixture is

$$C = r_1C_1 + r_2C_2 + \ldots + r_nC_n = \sum_{i=1}^{n} r_iC_i,$$

where r_i and C_i are the volume fractions of the components and the heat capacities per unit volume of individual components respectively.

4.5. Determining Mixture Parameters in Volume Equal to the Sum of the Volumes of the Components

Suppose that we know the individual volumes V_i and the state parameters p_i and T_i of the individual gases in these volumes. We must determine the pressure p and temperature T of the mixture.

Since individual components do no work during mixing (mixing takes place in the same constant volume), the internal energy of the mixture is equal to the sum of internal energies of the gases being mixed.

Taking the reference point for the internal energy at 0 K, we can write

$$\sum_{i=1}^{n} m_i c_{v_i} T_i = m c_v T, \tag{4.6}$$

where m_i, c_{v_i} and T_i are the mass, specific heat at constant volume and the temperature of individual components respectively, and m, c_v, and T are the mass, specific heat and temperature of the mixture.

It follows from (4.6) that

$$T = \sum_{i=1}^{n} m_i c_{v_i} T_i / m c_v.$$

Since

$$c_v = \sum_{i=1}^{n} g_i c_{v_i} = \sum_{i=1}^{n} m_i / m c_{v_i},$$

we have

$$m c_v = \sum_{i=1}^{n} m_i c_{v_i}.$$

Consequently,

$$T = \sum_{i=1}^{n} m_i c_{v_i} T_i / \sum_{i=1}^{n} m_i c_{v_i}.$$

The mass of an individual component is

$$m_i = p_i V_i / R_i T_i.$$

The pressure of the mixture is determined from Eq. (1.2) for the total volume $V = \sum_{i=1}^{n} V_i$:

$$pV = mRT.$$

Consequently,

$$p = mRT/V.$$

The product

$$mR = \sum_{i=1}^{n} m_i R_i.$$

Thus, considering that $V = \sum_{i=1}^{n} V_i$, we obtain

$$p = \left(\sum_{i=1}^{n} m_i R_i / \sum_{i=1}^{n} V_i\right)\left(\sum_{i=1}^{n} m_i c_{v_i} T_i / \sum_{i=1}^{n} m_i c_{v_i}\right).$$

When the gases of the same atomicity are mixed or if the gases of a certain atomicity are predominant in a mixture, we have

$$T = \sum_{i=1}^{n} p_i V_i \Big/ \sum_{i=1}^{n} \frac{p_i V_i}{T_i}; \quad p = \frac{\sum_{i=1}^{n} p_i V_i}{\sum_{i=1}^{n} V_i}.$$

Test Questions

1. In which ways is the composition of a gas mixture represented?
2. What does Dalton's law define?
3. Which pressure is called partial?
4. Which volume is called partial?
5. How is the partial pressure determined?
6. Which formulas are used for calculating the average molecular mass of a mixture when its composition by mass or by volume is specified?
7. In which way are the gas constant and heat capacity of a mixture determined?

Chapter Five

BASIC THERMODYNAMIC PROCESSES

5.1. Classification of Basic Thermodynamic Processes

In the general case, all three state parameters may change in a thermodynamic process. Of special importance for the theoretical investigation and practical application of the phenomena involving the influence of energy on the working fluid in heat engines, refrigerators, compressors and other units used in heat engineering are thermodynamic processes occurring under certain restrictions such as the constancy of a state parameter, the absence of heat transfer between the working fluid and the surrounding medium, or a constant specific heat of the working fluid.

The basic thermodynamic processes in engineering thermodynamics are the isochoric process (at constant volume), isobaric process (at constant pressure), isothermal process (at constant temperature), adiabatic process (in the absence of external heat transfer), and polytropic process (at constant specific heat of a gas).

The state of a working fluid at any moment of a thermodynamic process must satisfy the equation of state for an ideal gas. The relation between the heat of the process, the change in the internal energy of the working fluid and the work done by it or over it should agree with the first law of thermodynamics. Therefore, the investigation of thermodynamic processes is based on the equation of state for an ideal gas and the first law of thermodynamics. We must write the equation of a thermodynamic process, find out how the internal energy varies in the process, obtain the mathematical expressions for its mechanical and available works as well as for the amount of external heat supplied or removed in the process. For each process, the relation between the state parameters at the beginning and at the end of the process should be established, and the process should be graphically represented on the p-v diagram. The curves describing the basic thermodynamic processes are respectively called the *isochore*, *isobar*, *isotherm*, *adiabate*, *and polytrope*.

5.2. Isochoric Process

Isochoric processes occur during heating or cooling in a vessel of constant volume. This can be a cylinder with a fixed piston or a reservoir of a constant volume.

The equation of an isochoric process is $v = \text{const}$. The relation between the state parameters in an isochoric process is given by

Gay-Lussac's law for ideal gases:

$$p_1/T_1 = p_2/T_2.$$

On the p-v diagram, the isochoric process is represented by a segment of a straight line parallel to the p-axis (Fig. 4). The pressure and temperature of the gas increase with heating and decrease

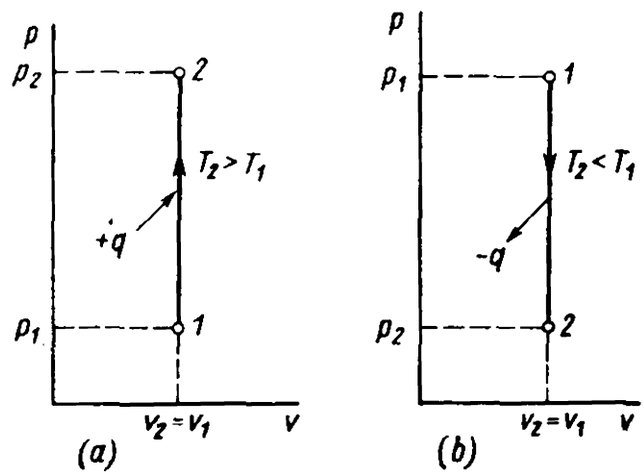

Fig. 4. The p-v diagram of an isochoric process:
(a) with heat supply; (b) with heat removal.

upon cooling. The mechanical work l of a gas in an isochoric process is equal to zero since the volume remains unchanged:

$$v = \text{const}, \quad dv = 0; \quad \int_{v_1}^{v_2} p\,dv = 0.$$

According to the first law of thermodynamics, the heat of an isochoric process is given by

$$q = \Delta u + l = \Delta u.$$

Since $l = 0$, the heat supplied to the gas is spent for increasing its internal energy. Consequently the internal energy, and hence the temperature of the gas to which heat is supplied in an isochoric process, increases, while in the process involving the removal of heat they decrease. Assuming that the specific heat of the gas is independent of temperature, we can write the following expression for the heat q of an isochoric process:

$$q = c_v (T_2 - T_1).$$

It follows from this equation that the change in the internal energy is

$$\Delta u = u_2 - u_1 = c_v (T_2 - T_1).$$

Since the change in the internal energy does not depend on the nature of the process, this formula can be used for determining the change in the internal energy in any thermodynamic process.

5.3. Isobaric Process

Isobaric processes occur during heating or cooling a gas under a constant pressure. Such a process can take place in a cylinder with a piston on which a constant load is acting. The equation of an isobaric process is p = const. In isobaric processes, the volume and temperature of a gas increase when the heat is supplied and decrease when it is removed from the gas. According to Charles' law, the

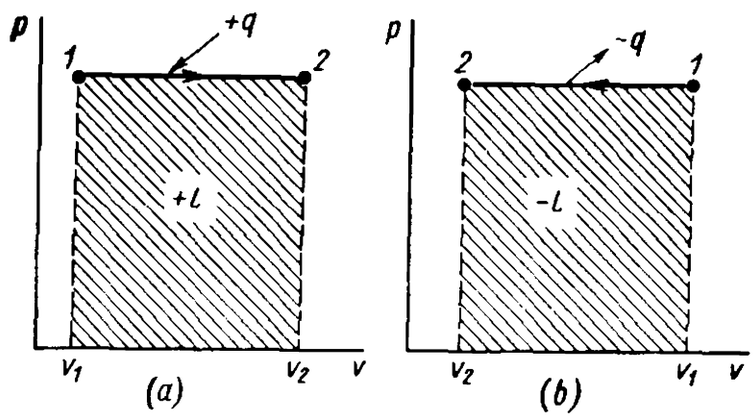

Fig. 5. The p-v diagram of an isobaric process:
(a) with heat supply; (b) with heat removal.

change in the gas volume in a process with constant pressure is proportional to the change in its absolute temperature, i.e.

$$v_2/v_1 = T_2/T_1.$$

The change in the internal energy during an isobaric process is given by

$$\Delta u = c_v (T_2 - T_1).$$

Equation of isobaric process. On the p-v diagram, the isobaric process is represented by a segment of a straight line parallel to the v-axis (Fig. 5).

The work done by a gas in an isobaric process is

$$l = p (v_2 - v_1) = R (T_2 - T_1),$$

since according to the equation of state, $pv = RT$.

Considering that $p_2 = p_1$, we can write the expression for the available work l_0 in an isobaric process:

$$l_0 = v (p_2 - p_1) = 0.$$

In accordance with the first law of thermodynamics the heat required for the process is given by

$$q = \Delta u + l = c_v (T_2 - T_1) + R (T_2 - T_1) = c_p (T_2 - T_1).$$

Comparing the expressions for the change in the internal energy $\Delta u = c_v (T_2 - T_1)$ and the heat $q = c_p (T_2 - T_1)$, we can calcu-

late the fraction α of heat required for changing the internal energy and the fraction $1 - \alpha$ for doing the mechanical work:

$$\alpha = \Delta u/q = c_v (T_2 - T_1)/c_p (T_2 - T_1) = 1/k;$$
$$1 - \alpha = (k - 1)/k.$$

It follows from these relations that as the atomicity increases, i.e. as the value of k decreases, the fraction of heat converted into mechanical work decreases, since the fraction of heat spent for changing the internal energy increases.

5.4. Isothermal Process

Isothermal processes occur during expansion and compression of a gas at a constant temperature, i.e. at a constant internal energy. In order to maintain the temperature constant during the expansion of a gas, a heat should be supplied to the gas, and during compression the heat should be removed, since during expansion the gas does

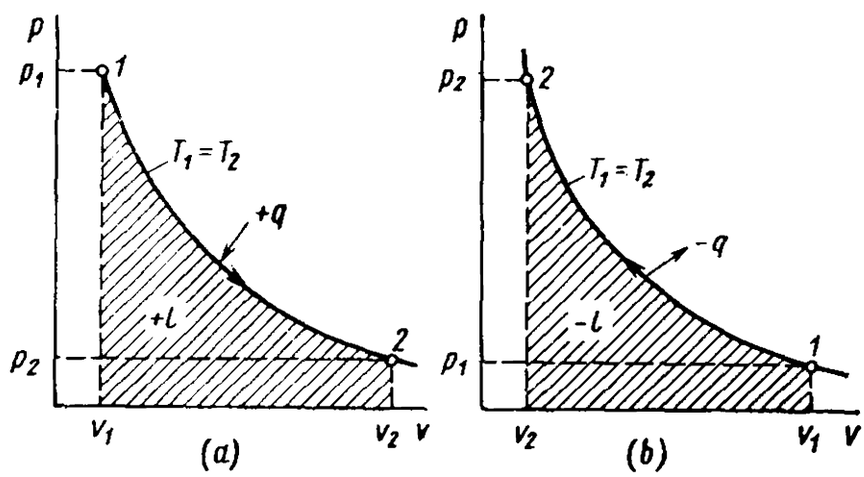

Fig. 6. The p-v diagram of an isothermal process:
(a) with heat supply; (b) with heat removal.

a useful work, while during compression the work is done on the gas. The equation of an isothermal process is $pv = \text{const}$. In the p-v coordinates, the isothermal process is represented by a segment of an equilateral hyperbola (Fig. 6). At a higher temperature, the corresponding isotherm will lie higher (or be shifted to the right).

The relation between the initial and final variable parameters in the process stems from the equation describing this process ($pv = \text{const}$):

$$p_1 v_1 = p_2 v_2 \quad \text{or} \quad p_2/p_1 = v_1/v_2.$$

Since the temperature is constant in isothermal processes, the internal energy of the gas also remains unchanged, i.e. $\Delta u = 0$.

The work done in an isothermal process is given by

$$l = RT \ln (v_2/v_1) = RT \ln (p_1/p_2).$$

Since according to Eq. (1.1) $RT = pv$, the formula for determining work may have several versions.

In accordance with the first law of thermodynamics the heat of an isothermal process is $q = l$, since for this process $\Delta u = 0$.

The available work l_0 in an isothermal process is equal to the mechanical work since, in the p-v coordinates, an isotherm is an equilateral hyperbola (pv = const):

$$l_0 = RT \ln (v_2/v_1) = RT \ln (p_1/p_2).$$

5.5. Adiabatic Process

Adiabatic processes occur during expansion and compression of a gas without external heat transfer. The equation of adiabat is pv^k = const. Since k is always greater than unity, in the p-v coordinates

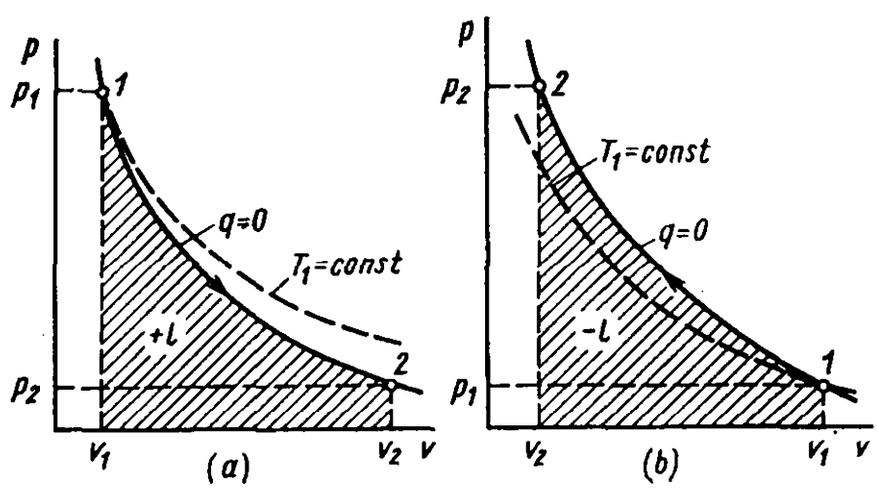

Fig. 7. The p-v diagram of an adiabatic process:
(a) with decreasing internal energy; (b) with increasing internal energy.

the adiabat corresponds to a segment of a displaced hyperbola which is steeper than an isotherm (Fig. 7). During an isothermal expansion, a gas performs the work equivalent to the amount of supplied heat. The temperature of the gas remains unchanged. Since pv = const, an increase in volume leads to a decrease in pressure in accordance with the hyperbolic law. In an adiabatic process, a useful work is also accomplished, but no heat is supplied to the gas, and the work is done at the expense of the internal energy of the gas. As a result, the gas temperature decreases. This leads to a more rapid decrease in the gas pressure than in the case of an isothermal process.

Thus, an adiabatic expansion of a gas occurs with an increase in volume and a decrease in pressure and temperature. For an adiabatic compression, these state parameters change in the reverse order.

The relation between the state parameters for an adiabatic process can be obtained from the adiabatic equation, taking into account Eq. (1.1):

$$p_2/p_1 = (v_1/v_2)^k; \quad T_2/T_1 = (v_1/v_2)^{k-1}; \quad T_2/T_1 = (p_2/p_1)^{(k-1)/k}.$$

The work done by a gas in an adiabatic process is

$$l = -\Delta u = c_v (T_1 - T_2), \text{ since } q = 0.$$

Using formula (3.5), we obtain

$$l = [R (T_1 - T_2)]/(k - 1).$$

Since $RT = pv$, we get

$$l = (p_1v_1 - p_2v_2)/(k - 1).$$

The mechanical work performed in an adiabatic process is given by

$$l = p_1v_1 [1 - (p_2/p_1)^{(k-1)/k}] = RT_1 [1 - (p_2/p_1)^{(k-1)/k}].$$

The available work in an adiabatic process is k times larger than the mechanical work, i.e. $l_0 = kl$.

5.6. Polytropic Process

Polytropic processes are those occurring at a constant specific heat and satisfying the equation $pv^n = \text{const}$, where n is the polytropic exponent. It can assume any value, but for a given process it is constant (all processes considered above are particular cases of a polytropic process).

The equation $pv^n = \text{const}$ of a polytropic process can also be represented in the form $p^{1/n}v = \text{const}$. For certain values of n, the polytropic equation corresponds to the equations of four basic thermodynamic processes:

$$n = \pm\infty; \quad v = \text{const};$$
$$n = 0; \quad p = \text{const};$$
$$n = 1; \quad pv = \text{const};$$
$$n = k; \quad pv^k = \text{const}.$$

Since the polytropic equation is similar to the adiabatic equation, the relations between the state parameters for a polytropic process are the same as for an adiabatic process:

$$p_2/p_1 = (v_1/v_2)^n; \quad T_2/T_1 = (v_1/v_2)^{n-1}; \quad T_2/T_1 = (p_2/p_1)^{(n-1)/n}.$$

The equation for the work done by a gas in a polytropic process will also be similar to that for an adiabatic process:

$$l = (p_1 v_1 - p_2 v_2)/(n - 1) = R\,(T_1 - T_2)/(n - 1).$$

The available work for a polytropic process is $l_0 = nl$. Since $c_v = R/(k - 1)$ and $R = c_v\,(k - 1)$, the heat of a polytropic process, in accordance with the first law of thermodynamics, is given by

$$q = \Delta u + l = c_v\,(T_2 - T_1) + R\,(T_1 - T_2)/(n - 1)$$
$$= c_v\,[(n - k)/(n - 1)]\,(T_2 - T_1). \qquad (5.2)$$

The heat of a polytropic process is

$$q = c\,(T_2 - T_1), \qquad (5.3)$$

where c is the specific heat of the gas in the polytropic process. A comparison of Eqs. (5.2) and (5.3) shows that

$$c = c_v\,[(n - k)/(n - 1)]. \qquad (5.4)$$

This gives

$$n = (c - c_p)/(c - c_v). \qquad (5.5)$$

If we plot all the thermodynamic processes considered above in the p-v coordinates (Fig. 8), we can draw the following conclusion. The thermodynamic processes (expansion processes) for $-\infty > n < 1$, which are described by the curves lying above the isotherm ($n = 1$) in the figure, occur with a temperature increase, while for $1 < n < +\infty$ they are accompanied by a decrease in temperature. Consequently the family of polytropic processes is divided into two groups depending on the sign of temperature increment.

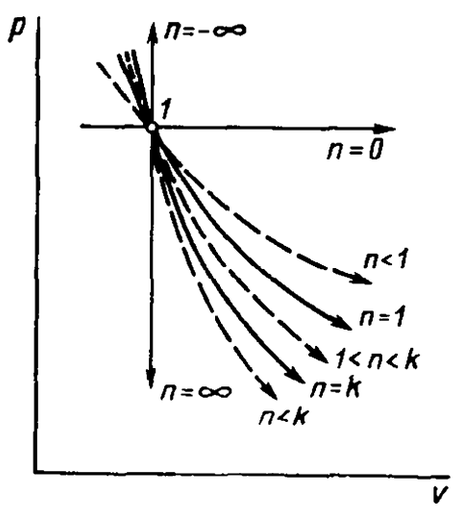

Fig. 8. The p-v diagram of polytropic processes.

For $-\infty < n < k$, the processes of expansion are characterized by the curves lying above the adiabat ($n = k$) and occur with a heat supply. For $k < n < +\infty$, the processes of expansion are accompanied by the removal of heat. Consequently, depending on the direction of heat transmission, the family of polytropic processes is also divided into two groups.

It should be taken into account that the sign of temperature in-

crement, work and the direction of heat transfer are reversed if we go over from expansion to compression. For example, for expansion processes lying on the diagram between the isobar and isotherm, the temperature increases (plus sign), the heat is supplied (plus sign) and the work is positive (plus sign). In the reverse process of compression, the temperature decreases (minus sign), the heat is removed (minus sign), and the work is negative (minus sign).

For $1 < n < k$, the polytropic processes have different signs of the temperature increment and direction of heat transfer. This means that if heat is supplied to a gas in a process of heating, the temperature decreases since the work done by the gas is larger than the supplied heat, and a fraction of internal energy is spent to perform work. For a similar process of compression for which the work of compression is larger than the removed heat, the temperature of the body, on the contrary, increases. Polytropic processes of this group, for $1 < n < k$, occur at a negative specific heat of a working fluid. Since specific heat $c = dq/dT$, it is negative when dq and dT have different signs. Using Eq. (5.4), we can determine the specific heat for basic thermodynamic processes by taking the values of n for particular cases of a polytropic process.

Representing Eq. (5.4) in the form $c = c_v (1 - k/n)(1 - 1/n)$, for $n = \pm \infty$ (v = const) and $c = c_v$ we obtain the specific heat for an isochoric process; for $n = 0$ (p = const) we obtain from (5.4) $c = c_p$, viz. the specific heat for an isobaric process. For $n = 1$ (pv = const) and $c = \infty$, we have the specific heat for an isothermal process. Finally, for $n = k$ (pv^k = const) and $c = 0$, we have the specific heat for an adiabatic process.

The specific heat for an isothermal process is equal to infinity, since the heat is supplied (upon expansion) or removed (upon compression) without any change in temperature. Since $c_m = q/\Delta T$ (for c_m see Subsec. 3.1), the specific heat is equal to infinity for $\Delta T = 0$. In an adiabatic process there is no heat transfer, $q = 0$, and hence the specific heat $c_m = 0$.

Basic thermodynamic processes are particular cases of a polytropic process. The specific heat for polytropic processes varies between $-\infty$ and $+\infty$. However, in a given polytropic process it should be constant.

Since in accordance with (5.5) the polytropic exponent depends on the specific heat c, it may have any value between $-\infty$ and $+\infty$. In a given thermodynamic process, this exponent must be invariable.

Determination of the change in enthalpy in a thermodynamic process. The enthalpy $i = u + pv$. For an ideal gas, $i = u + RT$. The change in the enthalpy in a thermodynamic process can be

found as follows:

$$\Delta i = i_2 - i_1 = u_2 - u_1 + R\,(T_2 - T_1)$$
$$= c_v\,(T_2 - T_1) + R\,(T_2 - T_1).$$

Since $c_v + R = c_p$, we have

$$\Delta i = c_p(T_2 - T_1).$$

Test Questions

1. List the basic thermodynamic processes.
2. Under which conditions do the basic thermodynamic processes occur?
3. What are the relations between the states parameters for basic thermodynamic processes?
4. In which way are the basic thermodynamic processes represented graphically in the p-v coordinates?
5. In which of thermodynamic processes is the mechanical work equal to zero? In which process is the available work equal to zero?
6. Which fraction of heat q is spent for changing the internal energy of a gas in an isobaric process and which part is converted into mechanical work?
7. Why does the temperature increase in isochoric and isobaric processes when heat is supplied and why does it decrease when heat is removed?
8. In which thermodynamic process are the mechanical work and available work equal?
9. In which thermodynamic process is the entire heat supplied to a gas converted into mechanical work?
10. Why does the temperature in an isothermal process, which involves heat supply or removal, remains unchanged?
11. Why is an adiabat steeper than an isotherm in the p-v coordinates?
12. Which thermodynamic process is called polytropic?
13. What is the range of the polytropic exponent for various polytropic processes?
14. In which polytropic processes do the gas temperature and its internal energy increase and in which processes do they decrease?
15. Which polytropic processes occur with a heat supply and which processes occur with a removal of heat?
16. In which polytropic processes is the specific heat of a gas negative and why?
17. Why are the relations between the state parameters in adiabatic and polytropic processes similar?
18. What is the relation between the mechanical work and the available work in adiabatic and polytropic processes?

Chapter Six

THE SECOND LAW OF THERMODYNAMICS

6.1. Basic Concepts of the Second Law of Thermodynamics

The second law of thermodynamics establishes the direction in which spontaneous thermal processes occur in nature and determines the conditions under which heat is converted into work. It states that heat is spontaneously transferred only from hot bodies to cold ones. The second law of thermodynamics is not a universal law like the first law of thermodynamics. It is an experimental statistical law which is valid only for bodies containing a large number of molecules. It can be violated for bodies containing a small number of molecules because the temperature in such systems may spontaneously increase in some parts of the volume. This may be caused by a nonzero probability that molecules having a high energy are simultaneously concentrated in some part of the volume, while those with a lower energy gather in another part. However, such a phenomenon is practically impossible for macroscopic systems, since its probability is vanishingly small.

As regards the conversion of heat into mechanical work, the second law of thermodynamics establishes the following condition. In order to convert heat into work, we must have two bodies at different temperatures. A hot body is a source of heat (required for doing work), while the cold body is a heat absorber (sink).

In accordance with the second law of thermodynamics, the heat of the source can be converted into work only partially, since in this process some fraction of heat is always transferred to the sink, the efficiency of a heat engine being always less than unity. This condition of conversion of heat into work is sometimes called the impossibility to construct a perpetual motion machine of the second kind.

A perpetual motion machine of the first kind is an engine that would perform work without energy expenditures, which is in contradiction to the first law of thermodynamics. A perpetual motion machine of the second kind is an engine which would convert into work the entire heat supplied to it (its efficiency is equal to unity). This contradicts to the second law of thermodynamics. Therefore, a perpetual motion machine of the second kind is impossible as well as the perpetual motion machine of the first kind.

6.2. A Cycle of a Heat Engine

The conversion of heat into mechanical work in a heat engine occurs during expansion of the working fluid. After the process of expansion is completed, the energy stored in the working fluid decreases and its volume increases. In order to gain work continuously, the working fluid should be returned into the initial state after each act of expansion. For this purpose, the working fluid should be compressed to the initial volume, and its energy should be restored to the value corresponding to the initial state by supplying heat. However, the working fluid cannot be returned to the initial state without transferring heat to a heat absorber. Consequently, only a fraction of supplied heat is converted to useful work as a result of the entire chain of processes of expansion and compression. The sequence of expansion and compression processes, as a result of which useful work is obtained and a working fluid returns to the initial state, is called a *cycle of a heat engine, or a forward cycle.* In an engine cycle, which is represented in the p-v coordinates by a closed contour of thermodynamic processes occurring in the clockwise direction, heat is supplied on some segments and removed on the others. The segments where heat is supplied or removed can be distinguished by drawing the adiabats which are tangential to the curves describing a thermodynamic cycle (Fig. 9). The heat supplied and removed in a cycle is denoted by Q_1 and Q_2, respectively. Since the working fluid returns to the initial state upon a completion of a cycle, the change in the internal energy of the working fluid in a cycle is equal to zero. Hence the difference in the supplied and removed heat is converted into the useful work of a cycle:

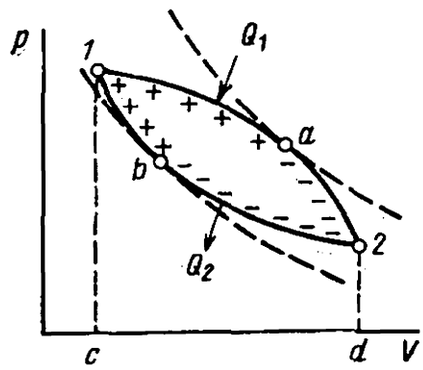

Fig. 9. The p-v diagram of a forward cycle. Plus and minus signs correspond to heat supply and heat removal respectively.

$$L = Q_1 - Q_2,$$

or per kilogram of a working fluid,

$$l = q_1 - q_2.$$

In the p-v coordinates, the useful work of a cycle is reprsesented by the area bounded by the curves describing the cycle.

The main characteristic of a heat engine cycle is its *thermal efflc-*

iency:

$$\eta_t = L/Q_1 = (Q_1 - Q_2)/Q_1 = 1 - Q_2/Q_1,$$

or per kilogram of a working fluid,

$$\eta_t = 1 - q_2/q_1.$$

6.3. Refrigeration Cycle

A spontaneous transfer of heat from a cold body to a hot one is impossible. Such a process requires a certain amount of energy to be delivered. The heat can be transferred from a cold to a hot body in a reverse, or a refrigeration, cycle (Fig. 10).

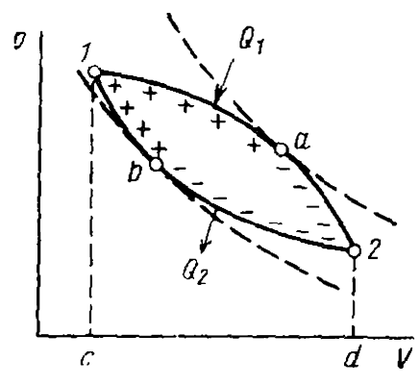

Fig. 10. The *p-v* diagram of a reverse cycle.

A refrigeration cycle should be performed in such a way that the processes of heat supply occur at a lower temperature than those involving the heat removal. In the *p-v* coordinates, such a cycle is represented by a closed contour circumvented in the counterclockwise direction. Bounding the cycle by two adiabats, we can single out the segments where heat Q_2 is supplied and the segments where heat Q_1 is removed. The work required for completing this cycle is given by

$$L = Q_1 - Q_2.$$

The main characteristic of a refrigeration cycle is the *coefficient of performance* of a refrigerating machine (or refrigerating factor), which is the ratio of heat Q_2 to the required work L:

$$\varepsilon = Q_2/L = Q_2/(Q_1 - Q_2). \tag{6.2}$$

The heat removed during the cycle is $Q_1 = Q_2 + L$.

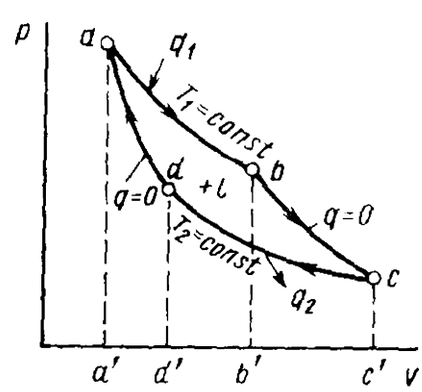

Fig. 11. Forward Carnot cycle.

6.4. The Perfect Cycle of a Heat Engine

In 1824, French engineer Sadi Carnot investigated a cycle of a heat engine, which was subsequently called after him the Carnot cycle. This cycle consists of two isotherms corresponding to heat supply and removal and two adiabats (of expansion and compression). A

gas in the Carnot cycle isothermally expands starting from the initial state (corresponding to point a in Fig. 11), so that its volume increases from v_a to v_b. The heat supplied to the gas from an external source at a temperature T_1 is given by

$$q_1 = RT_1 \ln (v_b/v_a).$$

At point b, the heat supply to the working fluid is terminated, and the gas adiabatically expands from volume v_b to v_c. In order to repeat the process of expansion, the working fluid should be returned to the initial state (point a). For this purpose, the gas is first isothermally compressed with a heat removal q_2 at the lower temperature T_2 of the cycle, so that its volume decreases from v_c to v_d. Then the gas is compressed adiabatically, i.e. without heat transfer, to be returned to the initial state.

The amount of heat removed during the cycle is

$$q_2 = RT_2 \ln (v_c/v_d).$$

The useful work of the cycle is given by

$$l = q_1 - q_2 = RT_1 \ln (v_b/v_a) - RT \ln (v_c/v_d).$$

The thermal efficiency of the Carnot cycle is

$$\eta_t = 1 - q_2/q_1 = 1 - (T_2/T_1) [\ln (v_c/v_d)/\ln (v_b/v_a)].$$

For adiabatic processes b-c and d-a, for which $T_c = T_d = T_2$ and $T_a = T_b = T_1$, we have

$$T_2/T_1 = (v_b/v_c)^{k-1} = (v_a/v_d)^{k-1}.$$

Consequently,

$$v_b/v_c = v_a/v_d \quad \text{or} \quad v_c/v_d = v_b/v_a.$$

This gives

$$\eta_t = 1 - T_2/T_1.$$

This formula shows that the thermal efficiency of a Carnot cycle does not depend on the nature of the working fluid and is determined only by the limiting values of temperature in the cycle.

The thermal efficiency of any thermodynamic cycle made up from reversible processes, in which heat supply and removal occur at varying temperatures, is equal to

$$\eta_t = 1 - T^{r}_{av}/T^{s}_{av},$$

where T^{r}_{av} is the temperature averaged over the process of removal of heat Q_2 and T^{s}_{av} is the average temperature of the process of supply of heat Q_1.

Since the average temperature of heat supply is $T^{s}_{av} < T_{max}$ and the average temperature of heat removal is $T^{r}_{av} > T_{min}$, the efficiency of any cycle performed at the same limiting temperatures as the Carnot cycle is less than the efficiency of the Carnot cycle since

$$\eta_t^C = 1 - T_2/T_1 = 1 - T_{min}/T_{max}.$$

The Carnot cycle is a standard for estimating the perfectness of other thermodynamic cycles. The perfectness of any heat engine cycle is estimated by the relative thermal efficiency, which is the ratio of the thermal efficiency η_t of a cycle under consideration to the thermal efficiency η_t^C of the Carnot cycle having the same limiting temperatures (T_{max} and T_{min}):

$$\eta_{ot} = \eta_t/\eta_t^C.$$

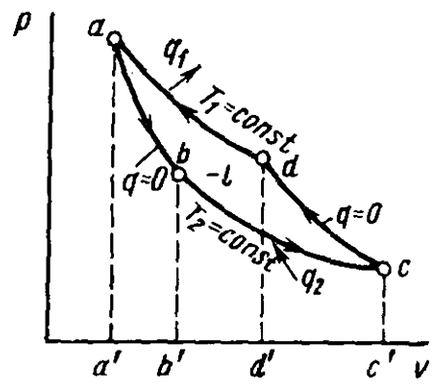

Fig. 12. Reverse Carnot cycle.

6.5. Perfect Refrigeration Cycle

The ideal refrigeration cycle is the reverse Carnot cycle shown in Fig. 12. The heat q_2 removed from a body being cooled is supplied in this cycle to the working fluid at a constant minimum temperature T_2:

$$q_2 = RT_2 \ln (v_c/v_b).$$

The heat q_1 removed in the cycle at a constant maximum temperature T_1 is

$$q_1 = RT_1 \ln (v_d/v_a).$$

Consequently,

$$\varepsilon = q_2/l = q_2/(q_1 - q_2) = T_2/(T_1 - T_2),$$

since

$$v_c/v_b = v_d/v_a.$$

The work done in a reverse Carnot cycle is given by

$$l = q_2 (T_1 - T_2)/T_2.$$

Since the reverse Carnot cycle ensures the maximum coefficient ε of performance for a given temperature interval $T_2 - T_1$, the work done in the Carnot cycle for removing heat q_2 is minimal in comparison with the work of any other refrigeration cycle within the same temperature range.

Test Questions

1. What is the formulation of the second law of thermodynamics?
2. Why is the second law of thermodynamics not universal?
3. What do we call the perpetual motion machine of the first and second kind?
4. Give the definition of a heat engine cycle.
5. Give the definition of the thermal efficiency of a heat engine cycle. Why cannot it be equal to unity?
6. What do we call the efficiency of a refrigeration cycle?
7. Which thermodynamic processes constitute the Carnot cycle? What is their sequence in the forward and reverse cycles?
8. Why does a forward Carnot cycle give the maximum thermal efficiency for a given temperature interval?
9. Give the definition of the relative thermal efficiency.

Chapter Seven

ENTROPY

7.1. Entropy and Its Variation in Thermodynamic Processes

Entropy S is a function of state of a working fluid, whose change in a reversible thermodynamic process satisfies the following equation:

$$dS = dQ/T \tag{7.1}$$

or per kilogram of a working fluid, we have

$$ds = dq/T,$$

where dQ (dq) and T are the heat and temperature of an elementary process respectively.

The change in the entropy for any reversible thermodynamic process with a supply and removal of heat is given by

$$\Delta s = s_2 - s_1 = \int_1^2 \frac{dq}{T}. \tag{7.2}$$

The ratio dQ/T is called the *elementary reduced heat.* Heat Q is not a function of state of the working fluid since it depends on the nature of a process. Consequently, dQ is not the differential of a function of state, but the ratio dQ/T is the differential of a function of state called the *entropy.*

The entropy is an extensive property of a substance, which obeys the additivity law. The entropy of a unit mass, or specific entropy is defined as

$$s = S/m.$$

For a complex system, the total value of entropy S is determined by summing up the values of entropies corresponding to its individual components:

$$S = \sum_{i=1}^{n} m_i s_i.$$

If reversible processes occur in an isolated system, its entropy does not change. In the case of irreversible processes in an isolated system, its entropy increases. The entropy change in an irreversible elementary process satisfies the inequality $dS > dQ/T$. Consequently, in the absence of heat transfer to the ambient ($dQ = 0$), $ds > 0$ for an elementary irreversible process. Thus, the irreversibility of a process causes an increase in entropy. Consequently, entropy is such a function of state of a working fluid which cannot decrease in any processes occurring in an isolated system. All real processes are irreversible, and hence the entropy of an isolated system can only increase. The degree of increase in the entropy corresponds to the degree of irreversibility of processes occurring in the system. Thus, entropy characterizes the degree of irreversibility of real processes.

Since spontaneous heat transfer from hot to cold bodies is one of the basic manifestations of the irreversibility of thermodynamic processes, entropy is also a criterion for estimating the direction of real processes in an isolated system.

The transition of an isolated system from a nonequilibrium to an equilibrium state as a result of spontaneous irreversible processes is accompanied by an increase in its entropy. Consequently, the numerical value of the entropy of an isolated system determines the proximity of the system to the equilibrium state corresponding to the maximum value of entropy.

If we substitute the quantity dq represented by the differential form (2.6) of the first law of thermodynamics into Eq. (7.2) and take into account Eq. (1.2), we obtain the following relations for determining the change in entropy in irreversible processes:

$$\Delta s = s_2 - s_1 = c_v \ln (T_2/T_1) + R \ln (v_2/v_1); \tag{7.3}$$

$$\Delta s = c_p \ln (T_2/T_1) - R \ln (p_2/p_1); \tag{7.4}$$

$$\Delta s = c_v \ln (p_2/p_1) + c_p \ln (v_2/v_1). \tag{7.5}$$

For a polytropic process, we have

$$\Delta s = [c_v (n - k)/(n - 1)] \ln (T_2/T_1).$$

The magnitude of entropy as a function of state is not defined. However, if we take an arbitrary state of a body as the reference level for calculating entropy, we can determine the entropy of a working fluid in any state.

In engineering, the reference level for calculating entropy is determined by the normal physical conditions $p_n = 101\ 325$ Pa and $T_n = 273\ K$. Using Eqs. (7.3)-(7.5), where we put the values of T_1, p_1, v_1 equal to T_n, p_n, v_n respectively, and assume that the parameters T_2, p_2, v_2 are the parameters T, p, v of an arbitrary state of a body, we can obtain the relations for determining the entropy for 1 kg of the working fluid:

$$s = c_v \ln (T/273) + R \ln [(\mu v)/22.4]; \tag{7.6}$$

$$s = c_p \ln (T/273) - R \ln (p/p_n); \tag{7.7}$$

$$s = c_v \ln (p/p_n) + c_p \ln [(\mu v)/22.4]. \tag{7.8}$$

It follows from these formulas that each set of parameters of state of a working fluid corresponds to a quite definite value of entropy.

7.2. Entropy and Working Capacity. The Law of Degradation of Entropy

If heat is spontaneously transferred from a hot to a cold body in an isolated system consisting of working fluids at different temperatures, this does not lead to a change in the energy of the isolated system. However, the working capacity of the system changes since in this case the entropy of the system increases.

Suppose that a system consists of three working fluids A, B and C with temperatures $T_1 > T_2 > T_0$, respectively. Suppose that heat Q is spontaneously transferred from body A at temperature T_1 to body B with temperature T_2. Then the heat capacities of these bodies are so large that their temperatures remain unchanged, the change in the entropies of these bodies is given by

$$\Delta S_A = -Q/T_1 \quad \text{(heat } Q \text{ is removed from body } A\text{)};$$

$$\Delta S_B = Q/T_2 \quad \text{(heat } Q \text{ is supplied to body } B\text{)}.$$

The total change ΔS in the entropy of the isolated system is determined as the algebraic sum of changes of the entropies of individual bodies:

$$\Delta S = \Delta S_A + \Delta S_B = (Q/T_2 - Q/T_1) = Q\,(T_1 - T_2)/T_1 T_2.$$

Since $T_1 > T_2$, the factor $(T_1 - T_2)/T_1 T_2 > 0$. Consequently, the entropy of an isolated system increases ($\Delta S > 0$) upon a spontaneous transfer of heat from a hot to a cold body (which is an irre-

versible process). Since the process of this kind is quite natural, the entropy increases here. Obviously, an increase in entropy is excluded in isolated equilibrium systems since when nonequilibrium systems go over to the equilibrium state, their entropy attains the maximum value. It can be shown that an irreversible heat transfer from a hot body to a cold one in an isolated system leads to the loss of the working capacity of the given nonequilibrium system.

By way of an example, let us consider the same system of three bodies A, B and C with temperatures $T_1 > T_2 > T_0$ respectively. Using the body with temperature T_1 as a source of heat Q and the body with temperature T_0 as a heat absorber for a Carnot cycle in the temperature interval (T_1, T_0), we obtain the work

$$L_1 = Q\eta^k_{t_1} = Q(1 - T_0/T_1).$$

If the heat Q under consideration is transferred from the body with temperature T_1 to the body with temperature T_2, then performing a Carnot cycle in the temperature interval (T_2, T_0), we obtain from the same amount of heat the work

$$L_2 = Q\eta^k_{t_2} = Q(1 - T_0/T_2).$$

Obviously, $L_2 < L_1$ since $T_2 < T_1$. A decrease in the working capacity of a system as a result of irreversibility of the process of heat transfer from a hot body to a cold one is equal to

$$\Delta L = L_1 - L_2 = T_0[(Q/T_2) - (Q/T_1)] = T_0(S_2 - S_1) = T_0\Delta S_{1r},$$

where ΔS_{1r} is the increase in entropy due to the irreversibility of the process. For 1 kg of working fluid, we have

$$\Delta l = T_0\Delta S_{1r}. \tag{7.9}$$

This formula is universal since the loss in the working capacity of a system can be determined by this formula for any thermodynamic process in which the entropy increases due to the process irreversibility.

While investigating thermodynamic systems in engineering, the temperature of the surroundings is taken for T_0. Since all processes in nature occur with a heat transfer from hot to cold bodies, entropy growth is a fundamental process in nature (known as entropy degradation).

German scientist R. Clausius, who introduced into thermodynamics the concept of entropy, extended the general law of entropy degradation for an isolated system to the Universe and arrived at the conclusion that the processes of heat transfer from hot to cold bodies would bring the Universe to an equilibrium state in which all vital processes should cease (heat death of the Universe). Clausius'

conclusion is erroneous since he generalized the law valid for an isolated system to a nonisolated system, viz. the Universe. Besides, admitting the possibility of the end of the evolution of the Universe, we should admit that it had the beginning, when its entropy was equal to zero. This is in contradiction with dialectic materialism, according to which the Universe exists eternally and endlessly. The matter constituting the Universe is eternal as well as its motion. Therefore, observing in nature the processes involving an entropy increase, the scientists admit the possibility that the processes in which entropy decreases also exist in the Universe.

7.3. *T-s* Diagram

Since entropy is uniquely determined by the state of a body, i.e. a function of state, it can be chosen as one of the parameters in the graphic analysis of processes. In engineering thermodynamics, the *T-s* coordinates are widely used, where the area below the curve describing a process corresponds to the heat of the process. The values of absolute temperatures are plotted on the ordinate axis and the

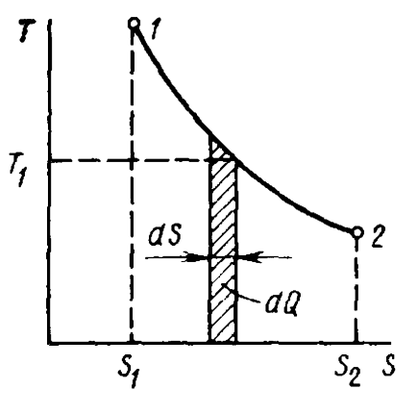

Fig. 13. The *T-s* diagram of a thermodynamic process.

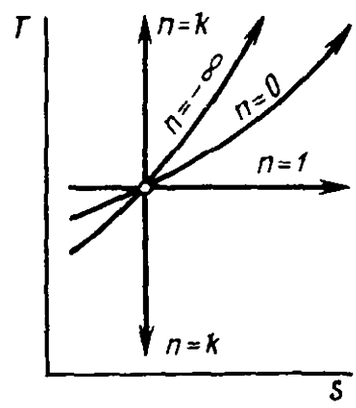

Fig. 14. The *T-s* diagram of polytropic processes.

entropy on the abscissa axis (Fig. 13). By definition, the entropy is given by the formula $dS = dQ/T$. Consequently,

$$dQ = T\,dS.$$

The product $T\,dS$ in the *T-s* coordinates corresponds to the hatched area element, while the total area is $\int_1^2 T\,dS$, i.e. is equal to Q.

Figure 14 shows the graphs of basic thermodynamic processes in the *T-s* coordinates.

The equations for the basic thermodynamic processes in terms of T and s can be written as follows:

isochoric process

$$\Delta s = \int_1^2 \frac{dq}{T} = \int_1^2 \frac{c_v\, dT}{T} = c_v \ln \frac{T_2}{T_1}$$ (logarithmic curve in the T-s coordinates)

isobaric process

$$\Delta s = \int_1^2 \frac{c_p\, dT}{T} = c_p \ln \frac{T_2}{T_1}$$ (logarithmic curve in the T-s coordinates)

isothermal process

$T = \text{const}$ (in the T-s coordinates, a straight line parallel to the abscissa axis)

adiabatic process

$$\Delta s = \int_1^2 \frac{dq}{T} = 0; \quad s = \text{const}$$ (in the T-s coordinates, a straight line parallel to the ordinate axis)

The change in the entropy in an elementary process is $ds = dq/T$. Considering that the absolute temperature of a body is always positive, we conclude that the sign of the entropy increment depends on the heat supply or removal. Consequently, in the T-s coordinates, reversible processes with a heat supply are characterized by increasing entropy, while the processes with a heat removal, by decreasing entropy.

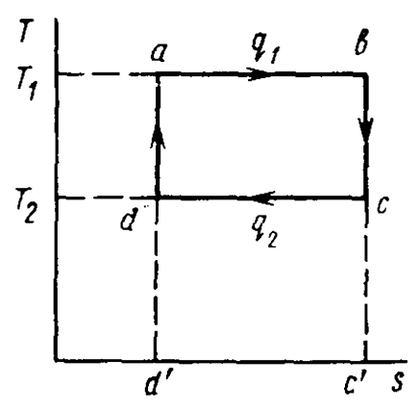

Fig. 15. Carnot cycle in the T-s coordinates.

A reversible Carnot cycle consisting of two isotherms and two adiabats is represented by a rectangle in the T-s coordinates (Fig. 15). The area $abc'd'$ corresponds to heat q_1, and the area $cdd'c'$ to heat q_2. Then the area $abcd$ corresponds to the heat converted into work.

Test Questions

1. Which function of state of a thermodynamic system is called the entropy?
2. In which way is the change in entropy in reversible thermodynamic processes defined?
3. How does the entropy of an isolated system change if irreversible processes of heat transfer from hot bodies to cold ones occur in the system?

4. In which way is the loss of working capacity of a working fluid with increasing entropy of an irreversible process determined?
5. How is the heat of a process determined in the T-s coordinates?
6. In which way are basic thermodynamic processes depicted in the T-s coordinates?

Chapter Eight

STEAM

8.1. Basic Concepts and p-v Diagram for Steam

Vapour is a real gas in a state close to condensation. Water vapour (steam) is formed by evaporating water or boiling. The temperature t_s of a boiling liquid depends on pressure p_s. The steam above the surface of boiling water has the temperature t_s (boiling point) and is called *saturated steam*. The saturated steam containing suspended moisture in the form of drops is called *wet steam*. The mass fraction of dry saturated steam in wet steam is called the *dryness factor* and is denoted by x. The fraction $(1 - x)$ of moisture in wet steam is called the *moisture content of steam*.

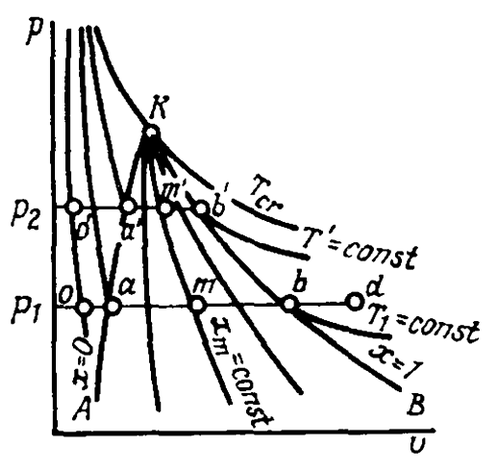

Fig. 16. The p-v diagram for steam.

If all moisture suspended in steam is evaporated, the steam becomes dry and saturated. Dry saturated steam has the temperature t_s. This state is unstable since drops of condensate appear in steam upon cooling, which makes it wet. The heating of dry saturated steam leads to an increase in its temperature, and the steam becomes overheated.

The process of steam generation can be analyzed in the p-v coordinates (Fig. 16). The following points are marked on the isobar p_1 = const: 0 corresponds to water at $t = 0$ °C, a to boiling water, m to wet steam with the dryness factor x_m, b to dry saturated steam and d to overheated steam. The primed quantities correspond to a higher pressure p_2 = const.

For pressure $p_s = 10$ kPa, the boiling point for water is t_s = 99.64 °C, the specific volume of boiling water is v' = 0.0010432 m³/kg, and the specific volume of dry saturated steam is v'' = 1.694 m³/kg.

As the pressure increases, the boiling point becomes higher, the volume of boiling water increases, while the volume of dry saturated steam decreases. For the parameters of the so-called critical state corresponding to the point K on the diagram, the volume of boiling water is equal to the volume of dry saturated steam. The critical parameters for water are $p_{cr} = 22.129$ MPa, $t_{cr} = 374.15$ °C and $v_{cr} = 0.00326$ m³/kg. At the temperature above the critical value, the working fluid cannot be the liquid regardless of the value of pressure.

A transition from boiling liquid to dry saturated steam requires a heat called the *heat of evaporation* and denoted by r. As pressure increases, the heat of evaporation r decreases and becomes equal to zero in the critical state since here the boiling liquid and dry saturated vapour have the same physical properties.

The line AK corresponding to the states of boiling water is called the *boundary curve for liquid.* The curve BK corresponding to the states of dry saturated steam is called the *steam boundary curve.* The lines connecting the points corresponding to the same dryness factor of wet steam are called the constant-dryness lines for steam (x = const).

The value of the dryness factor in an arbitrary state of wet steam is determined by the ratio of the segments of the isobar corresponding to the states of wet steam. For example, for points m the dryness factor is given by

$$x_m = am/ab; \quad (1 - x) = mb/ab.$$

In the region corresponding to the heating of water, the isotherms are close to vertical straight lines. In the region of wet steam, they coincide with isobars. In the region of overheated steam, the isotherms are hyperbolas (an increase in volume corresponds to a decrease in pressure).

The critical isotherm is a hyperbola with the point of inflection in the critical state.

8.2. State Parameters of Boiling Water and Steam

The process of evaporation in steam generators of heat power stations and power-and-heat supply systems occurs at a constant pressure p_s.

The heat of boiling liquid is

$$\lambda' = c'_{pm} (T_s - T'_0) = c'_{pm} t_s,$$

where c'_{pm} is the mean specific heat of water in the process of heating from zero to boiling point.

The enthalpy of boiling liquid is given by

$$i' = \lambda' + pv_0,$$

where pv_0 is the work done to deliver 1 kg of cold ($t_0 = 0°$ C) water to a steam generator. This quantity is small in comparison with λ' and is not taken into account while compiling the tables for steam.

The entropy of boiling liquid is

$$s' = c'_{pm} \ln (T_s/273).$$

For dry saturated steam, heat is

$$\lambda'' = \lambda' + r,$$

where r is the heat of evaporation;

enthalpy is

$$i'' = \lambda'' + pv_0 = i' + r;$$

and entropy is

$$s'' = s' + r/T_s = c'_{pm} \ln (T_s/273) + r/T_s.$$

For a wet steam with a dryness factor x,

specific volume is

$$v_x = (1 - x)\, v' = xv'',$$

where v' is the specific volume of boiling water and v'' is the specific volume of dry saturated steam,

heat is

$$\lambda_x = \lambda' + rx,$$

enthalpy is

$$i_x = \lambda_x + pv_0 = i' + rx, \tag{8.1}$$

and entropy is

$$s_x = s' + rx/T_s = c'_{pm} \ln (T_s/273) + rx/T_s.$$

For superheated steam,

heat is

$$\lambda = \lambda' + r + q_{sup} = \lambda' + r + c_{pm} (T - T_s),$$

where q_{sup} is the heat of superheating and c_{pm} is the mean specific heat of superheated steam in the temperature interval (T_s, T),

enthalpy is

$$i = \lambda + pv_0 = i' + r + c_{pm} (T - T_s) = i'' + c_{pm} (T - T_s),$$

entropy is

$$s = c'_{pm} \ln (T_s/273) + r/T_s + c_{pm} \ln (T/T_s).$$

It follows from the above relations that the total heat supplied to boiling water for generating steam in any state (dry, saturated, wet or superheated) goes for increasing the enthalpy of steam. The entropy of superheated steam can be treated as the sum of the entropies of boiling liquid and of evaporation and superheating of steam. For a high degree of superheating, when its temperature considerably exceeds the temperature of evaporation, steam becomes close to ideal gas. In this case, its parameters satisfy Clapeyron's equation. The specific volume of superheated steam can be approximately determined from Clapeyron's equation

$$v = RT/p.$$

The gas constant of superheated steam (in J/(kg·K)) is

$$R = 8314.3/\mu = 8314.3/18.016 = 462.$$

8.3. Heat of Evaporation and Specific Heat of Superheated Steam

Heat of evaporation depends on pressure and hence on the temperature of the process. The higher the pressure, the smaller the heat of

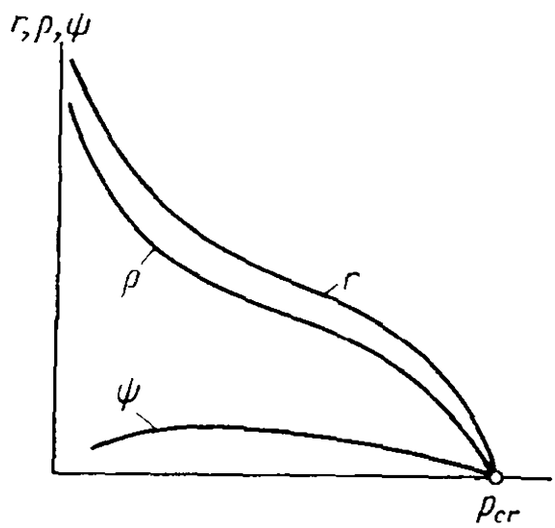

Fig. 17. Qualitative dependences of r, ρ and ψ on p_s.

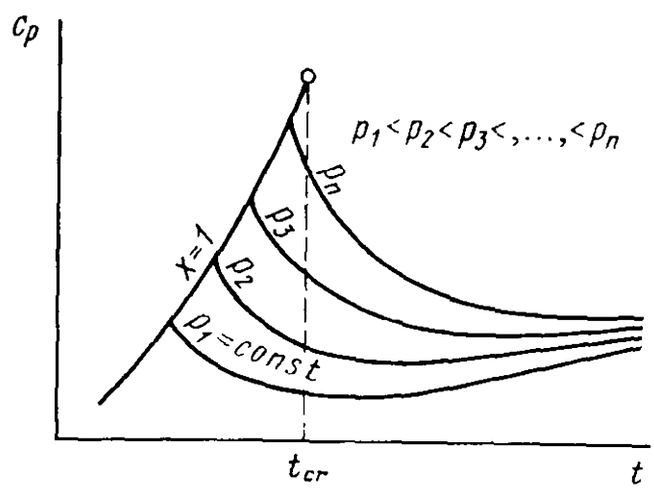

Fig. 18. Qualitative dependence of heat capacity on temperature and pressure.

evaporation. In the critical state, the heat of evaporation is equal to zero since the heat of boiling water is equal to the heat of dry saturated steam.

In accordance with the first law of thermodynamics, the heat of evaporation process is

$$r = \Delta u + l = (u'' - u') + p\,(v'' - v') = \rho + \psi,$$

where ρ is the heat spent for separating water molecules, i.e. for increasing the internal energy of molecules, and ψ is the heat required to do work for increasing the volume from v' to v''.

The qualitative dependence of r, ρ and ψ on the pressure in evaporation is shown in Fig. 17. The value of ψ is considerably smaller than ρ.

The specific heat of superheated steam considered as a real gas depends not only on temperature but also on pressure. For the same temperature, a higher specific heat of superheated steam corresponds to a higher pressure. The temperature dependence of specific heat of superheated steam is ambiguous. At the beginning of the process, the specific heat decreases, attaining a minimum value. With a further increase in temperature, the specific heat increases as in the case of an ideal gas.

Figure 18 shows the dependence of the specific heat of superheated steam on pressure and temperature. It should be noted that the higher the pressure, the higher the temperature at which the minimum value of the specific heat of superheated steam is attained.

In practical calculations, all parameters of boiling water and steam in various states are determined with the help of special tables and diagrams.

8.4. Steam Tables and Diagrams

The tables for saturated steam are compiled either on the basis of pressure or temperature. A table for dry saturated steam gives the values of p_s, t_s, v', v'', ρ'', r, i', i'', s' and s''.

The tables for superheated steam are compiled on the basis of temperature and pressure and contain the values of v, i and s. In practical calculations, when a change in the parameters of steam are required, the T-s and i-s diagrams are widely used.

The T-s diagram for steam is constructed in accordance with the data from tables (Fig. 19). In many respects, it resembles the p-v diagram, but here the boundary curves are more symmetric about the critical point. In the region of superheated steam, isobars are logarithmic curves. The isobars for water practically coincide with the boundary curve for liquid and are not shown in the diagram.

In the region of wet steam, isobars and isotherms coincide and are depicted by straight lines parallel to the abscissa axis. The isochores can be plotted on the T-s diagram by using points from a p-v diagram since putting v = const on the p-v diagram, we can determine a number of p and m values corresponding to different points of the isochore. The adiabats are shown in the T-s coordinates by segments of straight lines parallel to the ordinate axis.

The i-s diagram is more informative in comparison with the T-s diagram. While the heat on the T-s diagram is determined by the

area bounded by the curve characterizing a process, the enthalpy of steam on the i-s diagram (differing from the heat by pv_0) is determined by the segment of a straight line, which considerably simplifies the calculation of heat and enthalpy. Like the T-s diagram, the i-s diagram is plotted with the help of data from the tables. Figure 20 shows an i-s diagram containing the basic lines: the liquid boundary curve AK, steam boundary curve BK, the lines x = const, isobars, isotherms and isochores.

In the region of wet steam, isotherms coincide with isobars and are represented by straight lines. In the region of superheated steam,

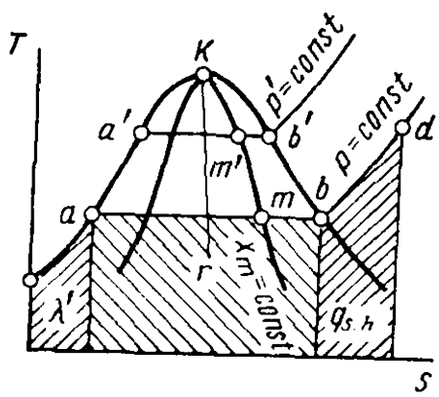

Fig. 19. The T-s diagram for steam.

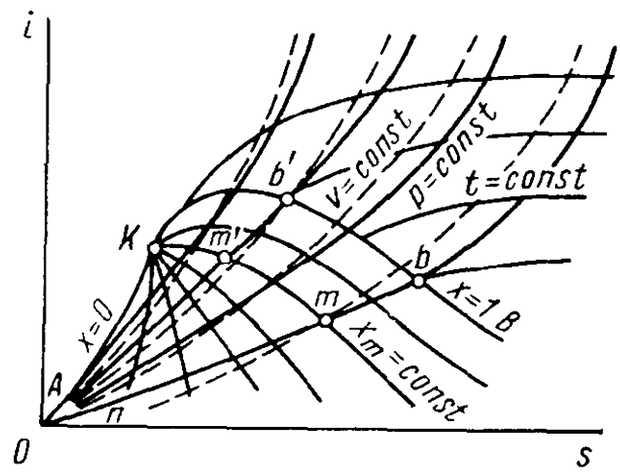

Fig. 20. The i-s diagram for steam.

the isobars are upward-directed logarithmic curves, while isotherms go to the right from the steam boundary curve. As the vapour pressure decreases at t = const, the superheat increases, and the isotherm asymptotically approaches the line i = const. Superheated steam behaves as an ideal gas.

Isochores are shown in the i-s diagram by red or dashed lines and are a bit steeper than isobars. In this diagram, pressure increases from right to left, while specific volumes decrease in this direction. The values of temperature increase in the upward direction. Adiabats are depicted on the i-s diagram by the segments of straight line parallel to the ordinate axis.

8.5. Processes Involving Changes in the State of Steam

Processes occurring in steam are calculated by i-s diagram. The starting point of a process is plotted from the known values of initial parameters p_1 and t_1 of superheated steam or p_1 and x_1 (t_1 and x_1) for saturated steam. The terminal point of the process is plotted in accordance with one of the final parameters on the corresponding line of the diagram, after which all the remaining parameters are determined.

Isochoric, isobaric and isothermal processes are plotted for the corresponding line on the diagram. The adiabatic process is represented on the i-s diagram by a segment of the vertical line, as in the case of T-s diagram.

The basic characteristics of the process are determined from the equations:

1. The change in the internal energy in the process

$$\Delta u = u_2 - u_1 = i_2 - i_1 - p_2 v_2 + p_1 v_1.$$

2. The heat of

isochoric process

$$q = \Delta u = u_2 - u_1 = i_2 - i_1 - v\,(p_2 - p_1),$$

isobaric process

$$q = i_2 - i_1,$$

isothermal process

$$q = T\Delta s = T\,(s_2 - s_1),$$

adiabatic process

$$q = 0.$$

3. The work

$$l = q - \Delta u.$$

All initial and final parameters appearing in these relations are determined by the i-s diagram.

This diagram can be used for calculating the heat of evaporation for any given pressure. For this purpose, on a given isobar two states should be chosen arbitrarily in the region of wet steam and the values of enthalpy corresponding to these states should be calculated.

Using relation (8.1) we can write for the two selected states

$$i_{x_1} = i' + rx_1; \qquad \text{(a)}$$

$$i_{x_2} = i' + rx_2. \qquad \text{(b)}$$

Since the enthalpy i' of boiling water is the same for the two states on the same isobar, subtracting (b) from (a), we obtain

$$r = (i_{x_1} - i_{x_2})/(x_1 - x_2).$$

The approximate analysis of an adiabatic process occurring in steam can also be carried out in accordance with formulas for gases given in Sec. 5.5 by using the adiabatic equation pv^k = const. For processes occurring in the region of superheated steam, k should be assumed equal to 1.3, while for wet steam $k = 1.035 + 0.1x$. The value of the dryness factor x for expansion should be chosen accord-

ing to the initial state and for compression, according to the final state. If the state of steam varies during an adiabatic process from the superheated to wet state or vice versa, the value of k should correspond to the initial state for expansion and to the final state for compression. If an adiabatic process starts and terminates on a boundary curve ($x = 1$) and the entire process occurs in the region of wet steam, then $k = 1.135$.

Test Questions

1. What is the difference between steam and an ideal gas?
2. In what physical states can steam be?
3. How does the temperature of saturated steam vary with pressure?
4. How does the heat of evaporation change with increasing pressure?
5. Can the heat of evaporation be equal to zero?
6. What are the characteristics of the critical state?
7. What is the difference between the enthalpy and heat of steam?
8. In which way is the entropy of boiling liquid, evaporation and superheating process determined?
9. In which states does steam become similar in its properties to an ideal gas?
10. Which parameters are contained in the tables for saturated and superheated steam?
11. In which way are the main thermodynamic processes in steam represented on the p-v, T-s and i-s diagrams?
12. How can the change in the internal energy of steam in a thermodynamic process be determined by the i-s diagram?
13. How can the heat of a thermodynamic process involving steam be determined by i-s diagram?
14. How can the heat of evaporation be determined by the i-s diagram?

Chapter Nine

THERMODYNAMICS OF MOIST AIR

9.1. Moist Air and Its State Parameters

Moist air is a mixture of clean dry air with water vapour. Depending on the state of steam in air, the latter can be *unsaturated* (when the steam in air is superheated) and *saturated* (when the steam in air is saturated). If air contains wet steam, there is a mist in it,

which is formed by drops of suspended moisture. In this case, air is called *supersaturated.*

According to Dalton's law, the pressure p of moist air is equal to the sum of partial pressures p_a and p_s of dry air and steam present in the volume of moist air.

The density ρ of steam in the volume of moist air is called the *absolute humidity of air.* To each state of moist air there corresponds a quite definite maximum possible value of the density ρ_{ss} of saturated steam. If the temperature t of moist air is less than or equal to the temperature t_s of saturated steam at the pressure p of the mixture, then ρ_{ss} is determined for the temperature t with the help of the tables of saturated steam. If the temperature t of the mixture is higher than t_s, the value of ρ_{ss} is determined with the help of the tables for superheated steam in accordance with the values of p and t.

The relative humidity of air is defined as

$$\varphi = \rho_s/\rho_{ss}.$$

The value of φ can be approximated by the ratio of the partial pressure p_s of steam in moist air to the maximum possible value p_{ss}, corresponding to the complete saturation of air at the same temperature:

$$\varphi = \frac{p_s}{p_{ss}}.$$

For $t < t_s$, the value of p_{ss} is determined from the tables for saturated steam. If air temperature $t > t_s$, then p_{ss} is assumed to be equal to the pressure of moist air. When moist air is cooled, a decrease in its temperature causes a decrease in the partial pressure of saturated steam (p_{ss}) and accordingly in the density ρ_{ss}. At a constant partial pressure p_s and density ρ_s of steam in air, this leads to an increase in the relative humidity φ. The heating of moist air decreases its relative humidity. If moist air is heated to above the saturation temperature, corresponding to the pressure of the mixture, the relative humidity of moist air remains unchanged.

The temperature at which unsaturated moist air becomes saturated as a result of cooling ($\varphi = 100\%$) is called the *dew point.*

The ratio of the mass of water vapour m_s in moist air to the mass of dry air m_a is called the *moisture content of air*:

$$d = m_s/m_a = \rho_s/\rho_a. \tag{9.1}$$

In accordance with the equation of state for an arbitrary volume V, we have

$$m_s = p_s V/R_s T; \quad m_a = p_a V/R_a T = (p - p_s)\, V/R_a T.$$

Taking into account these relations and using (9.1), we obtain

$$d = m_s/m_a = p_s R_a/(p - p_s) R_s = 287 p_s/462 (p - p_s).$$

Consequently,

$$d = 0.622 p_s (p - p_s) = 0.622 \varphi p_{ss} (p - \varphi p_{ss}). \tag{9.2}$$

It follows from this relation that the partial steam pressure p_s in moist air increases with the moisture content.

The density of moist air is

$$\rho = \rho_a + \rho_s.$$

The values of ρ_a and ρ_s at a temperature of moist air are given by

$$\rho_a = p_a/R_a T = (p - p_s)/R_a T; \quad \rho_s = p_s/R_s T.$$

Taking into account the relations for ρ_a and ρ_s and the fact that $R_a = 287$ and $R_s = 462$, we obtain

$$\rho = (p/R_a T) - 0.00132 p_s T. \tag{9.3}$$

This relation shows that the density of moist air decreases with increasing moisture content, i.e. with increasing p_s at a constant temperature.

The mean molecular mass of moist air is

$$\mu = \mu_a r_a + \mu_s r_s.$$

Since the volume fractions can be determined from the ratio of partial pressures to the total pressure,

$$r_a = p_a/p = (p - p_s)/p; \quad r_s = p_s/p,$$

the mean molecular mass of moist air is given by

$$\mu = 28.95 - 10.93 p_s/p.$$

The gas constant of moist air is

$$R = 8314.3/\mu = \frac{8314.3}{(28.95 - 10.93 p_s/p)}.$$

The enthalpy of moist air per kilogram of dry air or per $(1 + d)$ kilogram of moist air is

$$i = i_a + d i_s, \tag{9.4}$$

where i_a and i_s are the enthalpies per kilogram of dry air and steam.

The enthalpy of dry air for which $c_p = 1$ kJ/(kg·K) is given by

$$i_a = c_{pa} t = t.$$

The enthalpy of steam contained in moist air is (in kJ/kg)

$$i_s = 2500 + 1.93t.$$

Taking into account the expressions for the enthalpy of dry air and steam, Eq. (9.5) can be written in the form

$$i = t + d\,(2500 + 1.93t).$$

9.2. The *i-d* Diagram for Moist Air

The design of processes involving moist air is usually based on the *i-d* diagram for moist air, which is constructed for a certain pressure.

The basic feature of the *i-d* diagram for moist air (Fig. 21) is that the angle between the *i*- and *d*-axes is equal to 135°. The following lines are plotted on this diagram: isotherms t = const (the air temperature is determined with a dry-bulb thermometer); isoenthalpies i = const, the constant-humidity lines φ = const; the lines corresponding to constant values of temperature measured by a wet-bulb thermometer t_w = const, which start at the points of an isotherm t = const (on the line φ = 100%) and correspond to the same values of temperature. Under the line φ = 100%, the dependence of the partial steam pressure p_s in air on the moisture content d is plotted.

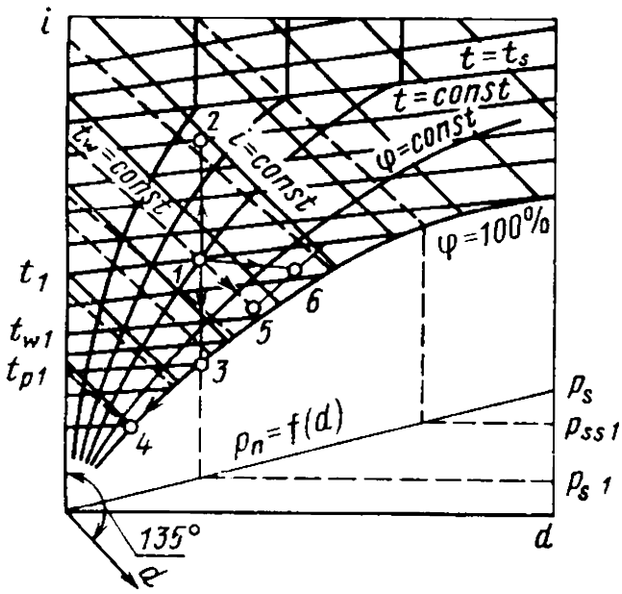

Fig. 21. The *i-d* diagram for moist air.

The *i-d* diagram depicts the main processes of change in the state of moist air. Air heating corresponds to segment 1-2 of the straight line parallel to the ordinate axis. The moisture content of air and the partial pressure of steam remain unchanged during heating.

The relative humidity $\varphi = p_s/p_{ss}$ of air decreases as the air is heated to $t = t_s$ since p_{ss} increases with temperature. At $t = t_s$ the value of p_{ss} is equal to the total pressure p of moist air. Any further increase in the temperature of moist air does not lead to a change in φ because p_{ss} attains its maximum possible value. Air cooling (segment 1-3) down to the dew point also occurs at p_s = const and d = const and is described by the segment of the curve parallel to the ordinate axis. Any further cooling of moist air (process 3-4) involves condensation. The change in the state of moist air in this case corresponds to the line φ = 100%.

The saturation of air with moisture without heat supply, when heat of air is spent for evaporating water (adiabatic saturation of air) is described by segment 1-5 of a straight line coinciding with the line i = const.

If we take into account the heat required for water evaporation during adiabatic saturation of air, the latter process is represented in the *i-d* diagram by the line corresponding to a constant temperature of a wet-bulb thermometer (t_w = const). The temperature of unsaturated moist air after its adiabatic saturation by moisture up to the state of complete saturation (to $\varphi = 100\%$) is called the *temperature of adiabatic saturation of moist air*. This temperature is equal in magnitude to that measured with the help of a wet-bulb thermometer.

As air is humidified by steam (segment 1-6), the enthalpy of moist air increases. The state parameters (i_2, d_2) of the air are determined by the initial (i_1, d_1) parameters and from the equations of heat and material balance for mixing:

$$i_2 = i_1 + d_s i_s, \tag{9.5}$$

$$d_2 = d_1 + d_s, \tag{9.6}$$

where i_s and d_s are respectively the enthalpy and the amount of steam supplied per kilogram of dry air.

9.3. Heat and Mass Transfer Between Moist Air and Water

When moist air comes in contact with the water surface, heat and mass transfer generally take place in moist air and water. A thin contact layer of completely saturated air is formed above the surface of water, the temperature of this layer being equal to the temperature of water. Mass transfer between water and moist air is determined by the relation connecting the partial pressure of steam p_s in moist air and the partial pressure of saturated steam p_{ssc} in the contact layer of air. If $p_{ssc} > p_s$, water will evaporate. If $p_s > p_{ssc}$, steam contained in air will condensate on the water surface.

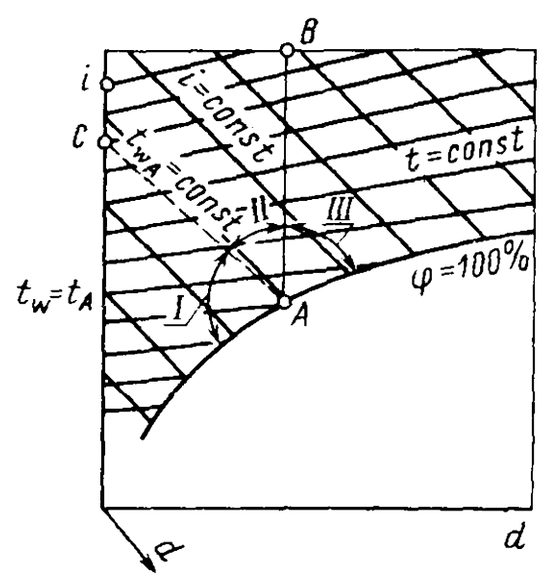

Fig. 22. The *i-d* diagram for heat and mass transfer between moist air and water.

Heat transfer between air and water surface is determined by the relation between the water temperature and the temperature of adiabatic saturation of air, which is equal in magnitude to the temperature measured by a wet-bulb thermometer. If the temperature measured in air by the wet-bulb thermometer is higher than the

temperature of water, heat will be transferred from air to water surface. If the temperature of water is higher than the temperature measured by the wet-bulb thermometer, water will be cooled, and heat will be transferred from water to air.

If we draw a line d_A = const (AB) from point A on the i-d diagram (Fig. 22), which corresponds to the state of moist air in the contact layer above the water surface for temperature t_w and a line t_{w_A} = const (AC) of the temperature of a wet-bulb thermometer, then the i-d diagram will be divided into three zones differing in the direction of heat and mass transfer between moist air and water:

I—water evaporates and cools; consequently, air in contact with water at $t = t_A$ is saturated by moisture and heated from the surface of water;

II—water evaporates and is heated; consequently, air is saturated and cooled;

III—steam from air condenses on the water surface and is cooled, while water is heated.

9.4. Mixing of Moist Air Flows

The parameters of the mixture obtained as a result of mixing the flows of moist air are determined on the basis of the balances of mass, enthalpy and moisture. If the mass flow rates of moist air in the flows being mixed are equal to m_1 and m_2 respectively, and the enthalpies and moisture contents in the flows are i_1, d_1 and i_2, d_2 respectively, the enthalpy and moisture content of the mixture are determined by the equations

$$i_m = (i_1 m_1 + i_2 m_2)/(m_1 + m_2);$$

$$d_m = (d_1 m_1 + d_2 m_2)/(m_1 + m_2).$$

If two air flows with high relative humidities are mixed, the points corresponding to the state of the mixture on the i-d diagram may lie below the line $\varphi = 100\%$. In this case, the actual state of saturated moist air will correspond to the point of intersection of isenthalpy i_m = const with the line corresponding to $\varphi = 100\%$.

Test Questions

1. In which states can moist air be?
2. What do we call the absolute humidity of air?
3. How is the relative humidity of air defined?
4. How does the relative humidity change upon heating and cooling of moist air?
5. What is called the moisture content of air? How is it determined?

6. How do the density and molecular mass of moist air change with increasing moisture content?

7. How does the gas constant for moist air change with increasing partial pressure of steam?

8. How are the processes of heating and cooling of moist air represented on the *i-d* diagram?

9. How is the process of air humidifying upon evaporation of water depicted on the *i-d* diagram?

10. How can the final state of moist air humidified by steam be determined?

11. How can the direction of mass transfer between moist air and water be determined?

12. How can the direction of heat transfer between moist air and water be determined?

13. How is the state of the mixture obtained upon mixing two moist air flows determined?

Chapter Ten

THERMODYNAMICS OF GAS AND STEAM FLOWS

10.1. Gas Velocity and Flow Rate

Steam (or gas) does work on the blades in steam and gas turbines. The kinetic energy of the flow is thus converted to the energy of motion of working elements of a turbine. In jet engines, the energy of a gas flow is transformed into the energy of motion of a plane or a rocket.

This potential energy of a gas is converted to kinetic energy in channels called *nozzles*. Processes in nozzles are accompanied by a drop in the gas pressure. The reverse process of conversion of the kinetic energy of the gas into potential energy, accompanied by a decrease in velocity and an increase in pressure, occurs in the channels called *diffusers*. The nozzles intended for attaining subsonic velocities should be converging. Supersonic diffusers have a similar shape. Divergent nozzles are used for obtaining supersonic velocities. Subsonic diffusers are also made in the form of divergent channels.

The first law of thermodynamics for a moving gas has the form

$$dq = du + d(pv) + d\frac{c^2}{2} = di + d\frac{c^2}{2},$$

where c is the velocity of gas flow.

For an adiabatic flow, $dq = 0$, and then $d(c^2/2) = -di$. Integrating this equation, we obtain

$$0.5(c_2^2 - c_1^2) = i_1 - i_2,$$

where i_1 is the enthalpy of a gas or steam corresponding to the state at the nozzle inlet, i.e. for p_1 and t_1, while i_2 is the enthalpy of the gas at the nozzle outlet, i.e. for p_2 and t_2.

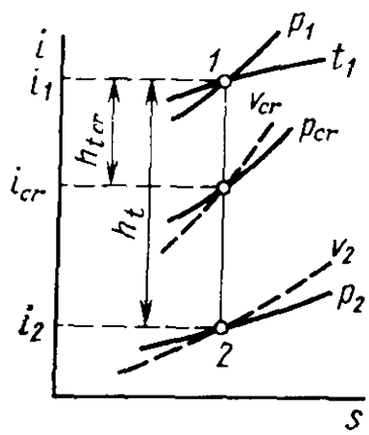

Fig. 23. Graphic method of determining the adiabatic drop with the help of the i-s diagram.

This expression can be used for determining the nozzle exit velocity c_2 of a gas or steam if we know the inlet velocity c_1 and the values of enthalpy i_1 and i_2 in J/kg:

$$c_2 = \sqrt{2(i_1 - i_2) + c_1^2} = \sqrt{2h_t + c_1^2}.$$

The difference in enthalpies $h_t = i_1 - i_2$ is called the *adiabatic drop*. The value of this quantity required for calculating the velocity c_2 of the gas flow can be determined with the help of the i-s diagram (Fig. 23).

If i is measured in kJ/kg, we obtain

$$c_2 = 44.8\sqrt{i_1 - i_2 + \left(\frac{c_1}{44.8}\right)^2}. \tag{10.1}$$

If we neglect the term incorporating the initial velocity whose value is small for low values of c_1, we obtain the following expression for the nozzle exit velocity $c_2 = c$:

$$c = 44.8\sqrt{h_t} = 44.8\sqrt{i_1 - i_2}.$$

For an ideal gas, the adiabatic drop is given by

$$i_1 - i_2 = c_p(T_1 - T_2) = [kR/(k-1)](T_1 - T_2)$$
$$= [k/(k-1)](p_1v_1 - p_2v_2) = [k/(k-1)]\,p_1v_1\,[1 - (p_2/p_1)^{(k-1)/k}]$$
$$= [k/(k-1)]\,RT_1\,[1 - (p_2/p_1)^{(k-1)/k}],$$

since the following relations are valid for the adiabatic expansion:

$$p_1v_1^k = p_2v_2^k \quad \text{and} \quad p_2v_2/p_1v_1 = (p_2/p_1)^{(k-1)/k}.$$

In this case, the formula for calculating the velocity of gas flowing through the nozzle is

$$c = \sqrt{2\,[(k/(k-1)]\,p_1v_1\,[1 - (p_2/p_1)^{(k-1)/k}]}. \tag{10.2}$$

Considering that in accordance with the equation of state of an ideal gas $p_1v_1 = RT_1$, it follows from formula (10.2) that the nozzle exit velocity depends on the initial temperature of the gas and on the ratio p_2/p_1 of pressures in the nozzle (and not on the pressure drop). The maximum velocity of gas for $p_2 = 0$ is

$$c_{max} = \sqrt{2\,[k/(k-1)]\,RT_1}.$$

The gas flow rate in a steady flow is the same in all nozzle cross sections. At the nozzle exit, it can be determined from the continuity equation

$$m = cf/v_2,$$

where f is the cross-sectional area, c is the gas velocity and v_2 is the specific gas volume at the nozzle exit.

The gas flow rate through the nozzle is calculated with the help of an i-t diagram:

$$m = f\,(44.8\sqrt{i_1 - i_2}/v_2). \tag{10.3}$$

The specific volume of a gas or steam at the nozzle exit is directly determined from the i-s diagram (Fig. 23).

When an adiabatic outflow of an ideal gas is analyzed, the gas volume at the nozzle exit is given by

$$v_2 = v_1\,(p_1/p_2)^{1/k}.$$

Then

$$m = f\sqrt{2\,[k/(k-1)]\,(p_1/v_1)\,[(p_2/p_1)^{2/k} - (p_2/p_1)^{(k+1)/k}]}.$$

10.2. Critical Flow

It follows from formula (10.2) that as $\beta = p_2/p_1$ decreases, the flow velocity increases. The pressure ratio for which the flow velocity is equal to the local velocity of sound is called the *critical ratio*:

$$\beta_{cr} = [2/(k+1)]^{k/(k-1)}.$$

Here we give the values of β_{cr} for some gases and steam.

Gases:	
monoatomic	0.485
diatomic	0.528
polyatomic	0.546
Steam:	
superheated	0.546
dry saturated	0.577

For $\beta > \beta_{cr}$, the flow velocity is subsonic. In this case, a simple converging nozzle should be used (Fig. 24a). For $\beta = \beta_{cr}$, the flow velocity is equal to the local velocity of sound. This is the limiting case for a simple nozzle. If $\beta < \beta_{cr}$, a complex nozzle should be

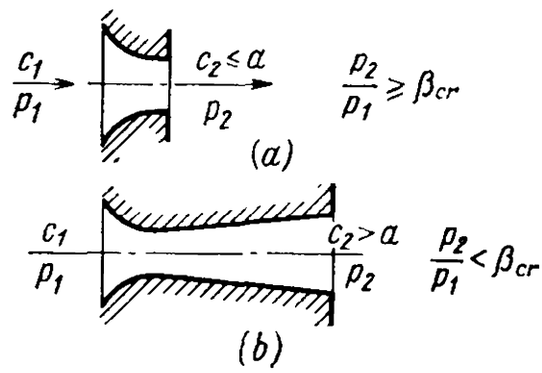

Fig. 24. Schematic diagram of a nozzle:
(*a*) simple nozzle, (*b*) Laval nozzle.

used, called the Laval nozzle (Fig. 24b). In the smallest cross section of a Laval nossle (at the throat) we have a critical flow.

Taking into account the critical pressure ratio, we obtain the following expressions for the critical flow:

$$c_{cr} = \sqrt{[2k/(k+1)]\, p_1 v_1} = \sqrt{[2k/(k+1)] RT_1},$$

$$m_{cr} = f_{cr} \sqrt{k \left(\frac{2}{k+1}\right)^{\frac{k+1}{k-1}} \frac{p_1}{v_1}}. \tag{10.4}$$

The gas temperature in the critical flow is

$$T_{cr} = T_1 2/(k+1).$$

The gas pressure in the critical flow is given by

$$p_{cr} = p_1 \beta_{cr}.$$

It follows from the above formulas that the parameters of the critical flow are not constant quantities. They depend on the initial parameters of a gas.

While calculating the steam flow rate with the help of the *i-s* diagram, formula (10.3) is used. When designing a Laval nozzle for $\beta < \beta_{cr}$, the gas flow rate can be calculated for the nozzle throat, i.e. by using the formula (10.4) for the critical flow.

The steam flow rate for $\beta < \beta_{cr}$ is

$$m = \frac{c_{cr} f_{cr}}{v_{cr}},$$

where c_{cr}, f_{cr} and v_{cr} are the velocity, cross-sectional area and the specific volume of steam at the Laval nozzle throat respectively.

The specific volume of steam at the nozzle throat is determined from the i-s diagram (see Fig. 23) for a pressure $p_{cr} = p_1\beta_{cr}$.

The critical velocity is given by

$$c_{cr} = 44.8\sqrt{i_1 - i_{cr}}.$$

10.3. Throttling of Gases and Steam

Throttling is the process of irreversible drop in the pressure of a gas or steam flowing through a contraction. Throttling occurs in partially open valves of all kinds. This effect is used for power control of heat engines or efficiency control of refrigerators. Throttling is characterized by a pressure drop at a practically constant enthalpy ($i_2 = i_1$).

In throttling, the working capacity of a working fluid decreases. If the initial parameters of a working fluid are p_1 and t_1, while the final pressure is p_2 (Fig. 25), then the available adiabatic drop characterizing the working capacity in the range of the parameters of state under consideration is equal to h_{t_1}.

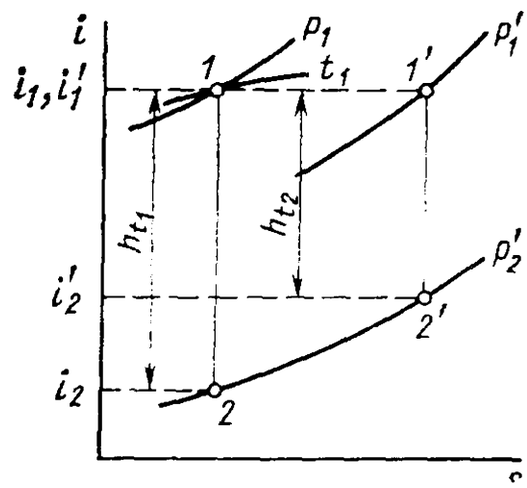

Fig. 25. Graphic representation of throttling.

In the case of throttling of a working fluid from p_1 to p_1', the initial enthalpy remains unchanged, but the available drop decreases to h_{t_2}. Consequently, the decrease in the working capacity of the working fluid due to throttling is

$$\Delta h = h_{t_1} - h_{t_2}.$$

Each gas is characterized by a certain temperature starting with which throttling occurs at a constant temperature. This temperature is called the *inversion temperature* t_{inv}. A gas may have several inversion points. Starting from $t < t_{inv}$, throttling occurs with a temperature decrease. Throttling of the gas from $t > t_{inv}$ proceeds with increasing gas temperature. The effect of temperature decrease in throttling is called the *Joule effect* and is widely used for attaining low temperatures as well as for gas liquefaction.

Adiabatic throttling of an ideal gas occurs with increasing entropy:

$$\Delta s = R \ln [p/(p - \Delta p)],$$

where p is the initial pressure and Δp is the pressure drop due to throttling.

An increase in the ideal gas entropy during throttling leads to a loss in the available working capacity. This loss is

$$\Delta l = T_0 \Delta s = RT_0 \ln [p/(p - \Delta p)],$$

where T_0 is the minimum temperature in the system of bodies under consideration (e.g., the temperature of the surroundings), K.

Test Questions

1. Which channels are called nozzles and diffusers?
2. How do flow velocity and pressure change in nozzles and diffusers?
3. How can the velocity in an adiabatic gas flow through a nozzle be determined?
4. How is the gas flow rate in a steady flow calculated?
5. Which flow is called critical?
6. How is the critical pressure ratio defined? What does it depend on?
7. How can the temperature and pressure of a gas in a critical flow be determined?
8. How can we determine the velocity and the gas flow rate in a critical flow?
9. Which process of gas flow occurs during throttling?
10. What characterizes the throttling process?
11. How can an increase in the ideal gas entropy during throttling be determined?

Part Two

FUNDAMENTALS OF HEAT TRANSFER

There are three kinds of heat transfer from hot to cold bodies: by conduction, by convection, and by radiation.

Heat conduction is the process of heat propagation in a working fluid through a transfer of kinetic energy from "hot" molecules to "cold" molecules with which they are in contact.

Heat transfer by convection is associated with the motion and mixing of hot and cold particles* of a working fluid. This type of heat transfer is mainly determined by the nature of motion of heat-transfer agent, viz. liquid or gas. If the motion of a heat-transfer agent is due to the difference in density of hot and cold particles, the so-called *free* (*natural*) *convection* takes place. The forced motion of liquid or gas caused by a pump or a fan leads to *forced convection*.

Heat transfer by radiation is the transport of thermal energy in the form of radiant energy. In this process, thermal energy is first transformed into radiant energy which is then again converted into thermal energy. Radiant energy is the energy of electromagnetic oscillations of photons propagating in space at the velocity of light.

Chapter Eleven

HEAT CONDUCTION

11.1. Heat Conduction Across a Plane Wall

The amount of heat passing through a unit cross-sectional area per unit time is called the *heat flux per unit area* (*or the rate of heat flow*) and denoted by q. The heat flow is formed due to the temperature difference (temperature gradient) between contacting particles of a working fluid.

* These particles are aggregates of molecules.

Each point of a body is characterized by a certain temperature. The values of these temperatures constitute the *temperature field*. If the temperature does not change with time, the field is called *stationary* (*time-independent*). If the temperature varies with time, the field is *nonstationary* (*time-dependent*).

The surface of a working fluid, all whose points are at the same temperature, is called an *isothermal surface*. The heat flow in the body is directed along the normal to an isothermal surface (at each of its points). Under nonstationary thermal conditions, isothermal

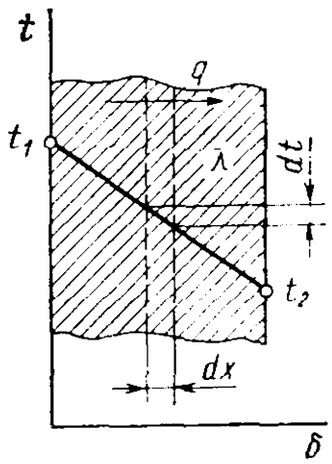

Fig. 26. Temperature variation across a one-layer plane wall in the process of heat transfer.

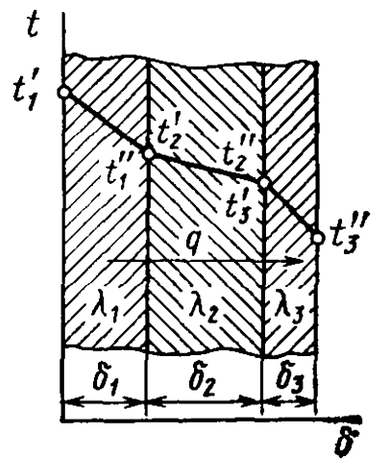

Fig. 27. Temperature variation across a three-layer plane wall in the process of heat transfer.

surfaces in a working fluid change their shape and position, while under stationary conditions they remain unchanged.

The heat flux due to heat conduction in the x-direction is determined by the Fourier law:

$$q = -\lambda\,(dt/dx), \tag{11.1}$$

where λ is the thermal conductivity of the body and dt/dx is the temperature variation per unit length along the x-direction (the temperature gradient).

The minus sign on the right-hand side of this formula makes the heat flux positive, since it is directed towards decreasing temperature (dt is negative).

The heat flux per unit area of a plane homogeneous wall of thickness δ, made of a material with thermal conductivity λ at constant temperatures t_1 and t_2 on its outer surfaces, is given by

$$q = (-\lambda/\delta)\,(t_2 - t_1) = (\lambda/\delta)\,(t_1 - t_2) = (\lambda/\delta)\,\Delta t. \tag{11.2}$$

The total heat flow through the area F during time τ is

$$Q = qF\tau = (\lambda/\delta)\,\Delta t F\tau,$$

where λ/δ is the thermal conductance of the wall, while δ/λ is its thermal resistance.

The temperature variation across a monolayer plane wall is shown in Fig. 26.

The heat flux (Fig. 27) across a multilayer wall under stationary thermal conditions must be the same for all its layers (1, 2, 3, ..., n):

$$q = \frac{\lambda_1}{\delta_1}(t_1' - t_1'') = \frac{\lambda_2}{\delta_2}(t_2' - t_2'') = \ldots = \frac{\lambda_n}{\delta_n}(t_n' - t_n''), \qquad (11.3)$$

where the primes indicate the temperatures at the boundaries of individual layers.

Formula (11.3) can be used for determining the temperature drop in each layer of a multilayer wall:

$$t_1' - t_1'' = q\frac{\delta_1}{\lambda_1}; \quad t_2' - t_2'' = q\frac{\delta_2}{\lambda_2}; \ \ldots; \quad t_n' - t_n'' = q\frac{\delta_n}{\lambda_n}. \qquad (11.4)$$

If we consider that $t_1'' = t_2'$, $t_2'' = t_3'$, etc., the termwise summation of expressions (11.4) gives

$$t_1' - t_n'' = q\,(\delta_1/\lambda_1 + \delta_2/\lambda_2 + \ldots + \delta_n/\lambda_n).$$

Hence

$$q = (t_1' - t_n'')/(\delta_1/\lambda_1 + \delta_2/\lambda_2 + \ldots + \delta_n/\lambda_n) = (t_1' - t_n'')\Big/\sum_{i=1}^{n}\frac{\delta_i}{\lambda_i}, \qquad (11.5)$$

where t_1' and t_n^2 are the temperatures of the outer surfaces of the multilayer wall.

Using this equation, we can determine the temperature at the layer boundaries if δ_i and λ_i are known.

Figure 27 shows the temperature variation in a three-layer wall heat conduction. The higher the thermal conductivity of a layer and the smaller its thickness, the smaller the temperature drop in the layer.

11.2. Heat Conduction Across a Cylindrical Wall

The heat transferred across a monolayer cylindrical wall by conduction of a tube is

$$q_l = 2\pi\lambda(t_1 - t_2)/\ln\frac{d_2}{d_1}, \qquad (11.6)$$

where t_1, d_1 and t_2, d_2 are the temperature and diameter of the inner and outer surfaces respectively.

This formula defines the heat flux per unit length of the tube. For a multilayer tube (with n layers), we have

$$q_l = 2\pi\,(t_1' - t_n'')\Big/\sum_{i=1}^{n}\frac{1}{\lambda_i}\ln\frac{d_i''}{d_i'}.$$

The temperature on the layer surfaces of a multilayer cylindrical wall can be calculated as follows:

$$t_2 = t_1 - (q_l/2\pi)\,(1/\lambda_1)\ln(d_2/d_1);\quad t_3 = t_2 - (q_l/2\pi)\,(1/\lambda_2)\ln(d_3/d_2) = t_1 - (q_l/2\pi)\,[(1/\lambda_1)\ln(d_2/d_1) + (1/\lambda_2)\ln(d_3/d_2)];\qquad (11.7)$$

$$t_{n+1} = t_1 - (q_l/2\pi)\sum_{i=1}^{n}\frac{1}{\lambda_i}\ln(d_{i+1}/d_i).$$

Unlike a plane wall, the temperature within each layer of a tube changes not linearly but in accordance with a logarithmic law.

The temperature dependence for a multilayer cylindrical wall, as well as for a plane wall, is described by a broken line. It should be taken into account that if the thickness of the tube wall is considerably less than its diameter, the calculation for the cylindrical wall can be made with the help of formulas (11.2) and (11.5) for a plane wall.

11.3. Heat Conduction Across a Spherical Wall

Let us consider a spherical wall, i.e. a hollow sphere made of a homogeneous material (one-layer wall) with the radii r_1 and r_2 of the inner and outer surfaces respectively. The temperatures of the surfaces are t_1 and t_2, where $t_1 > t_2$. The thermal conductivity of the wall material is λ. Then the amount of heat passing through the wall per unit time is

$$Q = [4\pi\lambda\,(t_1 - t_2)]/(1/r_1 - 1/r_2) = 4\pi\lambda\,(t_1 - t_2)\,r_1r_2/(r_2 - r_1).$$

The temperature variation occurring when the wall radius varies from r_1 and r_2 is given by

$$t = t_1 - (t_1 - t_2)\,[r_1r_2/(r_2 - r_1)]\,[(1/r_1) - (1/r)].$$

If a spherical wall has two layers (e.g. a metal and a thermal insulation) with thermal conductivities λ_1, λ_2 and radii of the surfaces r_1, r_2 and r_3, the temperature on the inner and outer surfaces being t_1 and t_3 respectively, then the amount of heat passing through the

two-layer wall per unit time is

$$Q = \left[4\pi\,(t_1 - t_3)\right] \Big/ \left[\frac{1}{\lambda_1}\left(\frac{1}{r_1} - \frac{1}{r_2}\right) + \frac{1}{\lambda_2}\left(\frac{1}{r^2} - \frac{1}{r_3}\right)\right].$$

The temperature at the boundary between the layers is

$$t_2 = t_1 - (Q/4\pi)\,[(1/\lambda_1)\,(1/r_1 - 1/r_2)].$$

11.4. Heat Conduction Through a Circular Rod and a Tube with an Internal Heat Source

Let us consider a circular rod with a uniformly distributed internal heat source. The heat flux continuously increases from the centre of the rod to the outer surface. If we denote by q_v the amount of heat liberated by a unit volume per unit time, then the radial variation of temperature is described by the relation

$$t = t_0 - q_v r^2/4\lambda,$$

where t_0 is the temperature at the rod axis.

Since the total amount of heat is vq_v, where v is the volume of the rod liberating heat ($v = \pi r_1^2 l$), and the outer surface of the rod is $2\pi r_1 l$, we obtain

$$t_0 - t_{\text{out}} = q_v r_1^2/4\lambda = q_l/4\pi\lambda = qr_1/2\lambda.$$

This relation connects the calculated temperature difference (between the temperature t_0 on the cylinder axis and the temperature t_{out} on its outer surface) with the rate q_v of internal heat source, heat flux q_l per unit length of the rod and heat flux q per unit area of the outer surface.

The temperature of a cylindrical wall (tube) with the rate q_v of internal heat sources per unit volume may have different values depending on the surface which removes the heat

$$q_l = \pi q_v\,(r_2^2 - r_1^2)$$

from the bulk, where r_1 and r_2 are the inner and outer radii of the tube respectively.

If heat is removed only from the outer surface of the tube, the radial variation of temperature is given by

$$t = t_1 - (q_v r_1^2/4\lambda)\,[(r/r_1)^2 - 2\ln\,(r/r_1) - 1],$$

where λ is the thermal conductivity of the wall material and t_1 is the temperature of the inner wall.

The temperature of the outer surface of the tube is

$$t_2 = t_1 - \frac{q_l}{4\pi\lambda}\,[1 - 2r_1^2\,\ln\,(r_2/r_1)/(r_2^2 - r_1^2)].$$

If heat is removed only from the inner surface of the tube, the radial variation of temperature is given by

$$t = t_2 - (q_v r_2^2/4\lambda)\,[2 \ln (r_2/r) + (r/r_2)^2 - 1],$$

where t_2 is the temperature of the outer surface of the tube.

The temperature of the inner surface of the tube is then

$$t_1 = t_2 - (q_l/4\pi\lambda)\,\{[2r_2^2/(r_2^2 - r_1^2)] \ln (r_2/r_1) - 1\}.$$

Test Questions

1. How can heat be transferred from hot to cold bodies?
2. What is the nature of heat conduction?
3. What do we call the temperature field of a body?
4. Which temperature field is called stationary?
5. Which surface is called isothermal?
6. How can the heat flux per unit area be defined in the case of heat conduction?
7. What is the temperature variation across a homogeneous plane and cylindrical walls during heat conduction?
8. How does temperature change in a multilayer wall?
9. How can we determine the temperature on the surface of a cylinder with internal heat sources?

Chapter Twelve

HEAT TRANSFER BY CONVECTION

12.1 Basic Concepts

In gases and liquids, heat is transferred by convection. Therefore, heat transfer between a fluid and boundary wall is called *heat transfer by convection*. This type of heat transfer is determined by the nature of fluid flow. Two kinds of flows can be distinguished: free flow and forced flow. *Free flow* is due to the difference in the densities of nonuniformly heated parts of a fluid. *Forced flow* is caused by external forces (exerted by a pump, fan or wind).

The conditions of free and forced flow of a fluid are determined to a considerable extent by the velocity. At low velocities, the so-called *laminar flow* of fluid is possible. In a laminar flow, the separate layers (laminae) of the fluid do not mix in spite of the difference in their velocities. As the flow velocity increases, separate layers of fluid acquire a wave-like shape, which corresponds to a transient flow of the fluid. With a further increase in the flow velocity, the

separate layers start to mix and the motion becomes disordered. Such a *flow* of fluid is called *turbulent*. It should be noted that in the turbulent regime, the fluid flow past a surface in the so-called boundary layer is laminar. A transition from one flow regime to another is determined by the Reynolds number

$$Re = \frac{wd}{\nu},$$

where w is the linear flow velocity, d is the diameter of a channel and ν is the kinematic viscosity of the fluid.

While calculating the Reynolds number, the average velocity over the channel cross section is taken. If a channel has a noncircular cross section, the so-called *equivalent diameter* is used, defined by

$$d_{eq} = 4f/\Pi,$$

where f is the area of the normal cross section of the channel and Π is the wetted perimeter of the channel cross section.

For a circular pipe, $f = \pi r^2$ and $\Pi = 2\pi r$. Hence

$$d_{eq} = 4\pi r^2/2\pi r = 2r = d.$$

The transition from laminar to turbulent flow is not determined by a single value of the Reynolds number. This transition depends on many parameters describing the physical properties of the fluid and on geometrical size of the channel. It was established, for example, that for Re $<$ 1900-2000, the flow in smooth circular pipes is laminar, while for Re $>$ 12 000-13 000 the flow is turbulent. However, by using a smooth circular pipe with smooth duct entry and by eliminating disturbances in the flow, it is possible to extend laminar flow up to Re = 40 000 and sometimes even to 50 000. When calculating heat transfer in pipes, it is assumed that laminar flow corresponds to Re $<$ 2000 and turbulent flow to Re $>$ 10 000. The range of variation of Re from laminar to turbulent steady-state flow is called the *transition zone*.

Convective heat transfer is calculated on the basis of Newton's law of cooling by the formula

$$Q = \alpha F (t_f - t_w) \tau, \tag{12.1}$$

where α is the heat-transfer coefficient, F is the heat-transfer surface, t_f and t_w are the temperatures of the fluid (heat-transfer agent) and the wall respectively, and τ is time.

The temperature of a fluid near the wall differs considerably from the bulk temperature of the flow. While calculating heat transfer in pipes by formula (12.1), the average temperature of the heat-transfer agent is used for t_f.

The heat-transfer coefficient α depends on many factors. The main factors determining the value of this coefficient are the nature of

fluid flow (laminar or turbulent), physical properties of fluid, the flow velocity, the direction of the flow relative to the surface in a flow, the shape and length of the channel, the direction of the heat flow, and the roughness of the surface.

The value of α is determined either with the help of empirical formulas obtained as a result of processing the experimental data by the similarity method, or from the experimental results.

Here we present the values of heat-transfer coefficient α for several cases.

Heating or cooling of air	1.0-150
Heating or cooling of water	200-12 000
Heating of steam	25-125
Heating or cooling of oils	50-1 800
Boiling of water	500-60 000
Steam condensation on wetted surface	4 500-16 000
Steam condensation on nonwetted surface . . .	40 000-120 000

12.2. Similarity of Convective Heat Transfer Processes

In view of the limited possibility for analytical solutions of the problems involving convective heat transfer, experimental methods are mainly employed to study heat transfer in fluid flows. In order to be able to use the experiment results for solving such problems, experiments are carried out on the basis of similarity methods which are also used for the processing of experimental data.

The similarity of physical phenomena is essentially reduced to the similarity of the fields of the same physical quantities which determine a given phenomenon. For physically similar phenomena, any physical quantity φ' of the first phenomenon must be proportional to the corresponding quantity φ'' of the second phenomenon at similar points. In other words, the relations of the form

$$\varphi' = c_\varphi \varphi''$$

hold, where c_φ is the proportionality factor.

The constant c_φ is called the *similarity factor*.

When similar phenomena are compared, different physical quantities have their own similarity factors. However, for a chosen physical quantity, the similarity factor should be the same for all geometrically similar points at similar instants of time.

The similarity of phenomena necessitates the geometrical similarity of the systems. Similar phenomena are characterized by the equality of the so-called similarity parameters, or criteria, which are dimensionless groups formed by the parameters characterizing phenomenon under investigation.

Similarity parameters are determined from the mathematical equations of a phenomenon or by the dimensional analysis of the quantities determining these parameters. They are divided into two groups. The parameters of the first group contain the quantities being determined. For example, the similarity criterion of convective heat transfer is the Nusselt number given by

$$\mathrm{Nu} = \alpha l/\lambda_f,$$

where α is the heat-transfer coefficient (which is usually the quantity being determined), l is the reference length (diameter for a tube, length for a horizontal plate, height for a vertical plate, etc.), λ_f is the thermal conductivity of the heat-transfer agent, the subscript findicating that this quantity is determined for the bulk temperature of the heat-transfer agent (fluid).

The similarity criteria of the second group for a free flow of a fluid are:

the Grashof number

$$Gr_f = g\beta\Delta t \frac{l^3}{\nu_f^2},$$

where g is the acceleration due to gravity, β is the coefficient of thermal expansion of the heat-transfer agent, Δt is the temperature drop, i.e. the temperature difference between the surroundings and heat-transfer surface, l is the reference length and ν is the kinematic viscosity, and

the Prandtl number

$$\mathrm{Pr}_f = \nu_f/a_f,$$

where $a_f = \lambda_f/c_{pf}\rho$ is the thermal diffusivity of the heat-transfer agent and c_{pf} and ρ are the specific heat and density of the heat-transfer agent respectively.

For a forced flow, the second-group similarity criteria for convective heat transfer are the Reynolds number and the Prandtl number.

For nonstationary processes of heat transfer, an additional similarity criterion of the second group is the Fourier number

$$\mathrm{Fo}_f = a_f\tau/l^2,$$

where τ is time.

The parameters of the second group include physical quantities.

The following dependence exists between the Nusselt criterion and the second-group similarity criteria:

for free convection

$$\mathrm{Nu}_f = f_1\ (\mathrm{Gr}_f;\ \mathrm{Pr}_f);$$

for forced convection

$$\mathrm{Nu}_f = f_2\ (\mathrm{Re}_f;\ \mathrm{Gr}_f;\ \mathrm{Pr}_f).$$

Using the numerical values of second-group similarity criteria, the Nusselt number and then the heat-transfer coefficients are determined:

$$\alpha = \mathrm{Nu}_f \lambda_f / l.$$

12.3. Heat Transfer by Free Convection

Heat transfer in unbounded space. Two types of heat transfer are possible here: heat-transfer agent is heated or cooled by a solid wall. In the first case, the heat-transfer agent is heated in the contact layer and rises, while in the second case, it is cooled and goes down. The temperature t_f of the heat-transfer agent in the contact layer rises or drops to the temperature t_w of the wall. On the surface of the wall and at a considerable distance from it, the velocity of heat-transfer agent is equal to zero. This velocity attains the maximum value at a certain distance from the wall.

The nature of flow of the heat-transfer agent mainly depends on the temperature drop $\Delta t = t_w - t_f$ (when the fluid is heated) or $\Delta t = t_f - t_w$ (when it is cooled), where t_f is the temperature of the fluid at a considerable distance from the wall.

Heat transfer by free convection is determined by the product of the similarity criteria (Gr and Pr):

$$\mathrm{Nu}_f = A\,(\mathrm{Gr}_f \mathrm{Pr}_f)^m\,(\mathrm{Pr}_f/\mathrm{Pr}_w)^{0.25}.$$

The parameters A and m for different conditions of heat transfer are presented in Table 2.

Table 2

Type of surface	Parameters		
	A	m	$\mathrm{Gr}_f\mathrm{Pr}_f$
Horizontal tubes: laminar flow	0.5	0.25	$10^3 < \mathrm{Gr}_f\mathrm{Pr}_f < 10^8$
Vertical tubes, plane vertical surfaces:			
laminar flow	0.76	0.25	$10^3 < \mathrm{Gr}_f\mathrm{Pr}_f < 10^9$
turbulent flow	0.15	0.33	$\mathrm{Gr}_f\mathrm{Pr}_f > 10^9$

Heat transfer in bounded space. In a bounded space, free convection originates if one part of a surface serves as a heater, and the other as a cooler. Therefore, the processes of heating and cooling occur simultaneously. Since it is difficult to isolate these processes in a bounded space, free convection is usually identified with an increase in

the thermal conductivity of the heat-transfer agent which fills the space between the surfaces at different temperatures. The concept of the *equivalent thermal conductivity* is then introduced:

$$\lambda_{eq} = Q/(F\Delta t\delta),$$

where Q is the heat being transferred, F is the rated surface of heat transfer, Δt is the temperature drop and δ is the average thickness of the gap between the heat-transfer surfaces (e.g., the air gap).

Dividing λ_{eq} by the thermal conductivity of the heat-transfer agent, we obtain the coefficient ε_c taking into account free convection,

$$\varepsilon_c = \lambda_{eq}/\lambda,$$

which is approximately equal to

$$\varepsilon_c = 0.18\ (\mathrm{Gr}_f\mathrm{Pr}_f)^{0.25}.$$

The reference length for the Grashof number is the quantity δ.

12.4. Heat Transfer by Forced Convection

For forced convection, i.e. for the flow of a heat-transfer agent due to external forces, we have

$$\mathrm{Nu}_f = B\mathrm{Re}_f^n\mathrm{Pr}_f^l\,(\mathrm{Pr}_f/\mathrm{Pr}_w)^{0.25}. \tag{12.2}$$

For laminar flow in pipes, this equation is supplemented by the factor $\mathrm{Gr}_f^{0.1}$. Table 3 contains the values of quantities B, n and l for various cases of heat transfer between a fluid and a hot surface.

When a plate is in a flow whose temperature differs from that of the plate, a thin thermal boundary layer is formed between the sur-

Table 3

Flow of heat-transfer agent	B	n	l
Turbulent flow near horizontal plate	0.037	0.8	0.43
Laminar flow near horizontal plate	0.66	0.5	0.33
Turbulent flow through a tube	0.021	0.8	0.43
Laminar flow through a tube	0.15	0.33	0.43
Cross flow past a tube:			
$10 < \mathrm{Re}_f < 10^3$	0.5	0.5	0.38
$10^3 < \mathrm{Re}_f < 10^9$	0.25	0.6	0.38
Cross flow past tube bundles:			
netlike arrangement	0.23	0.65	0.33
staggered arrangement	0.41	0.6	0.33

face of the plate and the flow core. Within this layer, the temperature varies from its value t_w at the wall to the temperature t_f of the fluid far from the wall. The temperature t_f of the fluid is taken as the determining parameter, while the temperature of the wall serves this purpose for defining Pr_w. For a fluid flow in pipes, the determining parameter is the average temperature of the fluid:

$$\bar{t}_f = \frac{1}{2}(\bar{t}_f' - \bar{t}_f''),$$

where $\bar{t}_f''$ and $\bar{t}_f'$ are the average temperatures of the fluid at the inlet and outlet cross sections of the segment of the pipe under consideration.

The equivalent diameter of the pipe is the reference length.

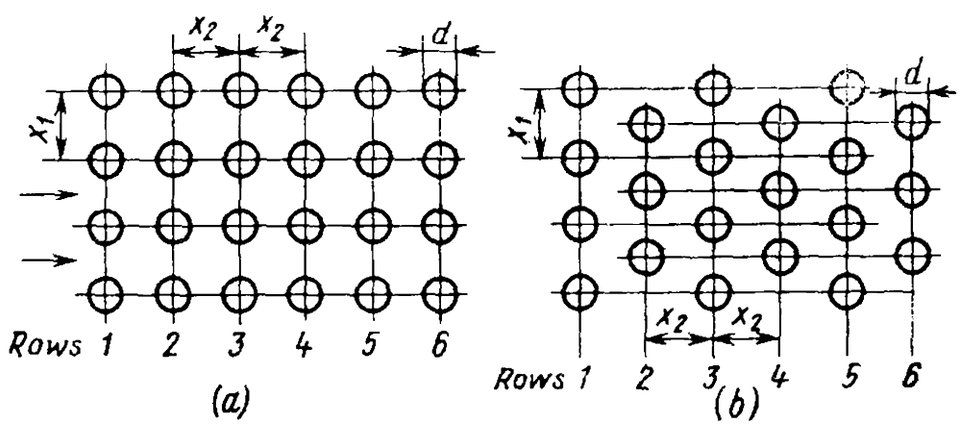

Fig. 28. Arrangement of pipes in heat-exchanger bundles:
(*a*) netlike arrangement; (*b*) staggered arrangement.

While calculating the heat transfer in tube bundles, the determining parameters are the bulk temperature of the fluid, the velocity in the minimal cross section of the row and the external diameter of the tube.

It should be taken into account that if we use formula (12.2) for calculating heat transfer for a tube bundle, the actual value of the heat-transfer coefficient corresponds to the third and subsequent rows of tubes. The heat transfer in the first row amounts only to 60% of the calculated value, and in the second row it is about 70-90%. This can be explained by a gradual increase in the flow turbulence in the bundle, which is then stabilized as we go over to the third row of tubes.

It follows from the comparison of the values of B and n for the netlike and staggered arrangement of tube bundles that for the same values of Re_f and Pr_f heat transfer in staggered bundles is higher.

Figure 28 shows the two types of arrangement of tube bundles in heat exchangers.

Test Questions

1. What is the nature of convective heat transfer?
2. Which factors determine the convective heat transfer?
3. Which flows of fluid are called free flows and forced flows?
4. Which flows are called laminar and which turbulent?
5. What do we call the boundary layer? Which flow conditions are observed in it?
6. In which way is the condition of flow determined?
7. Give the definition of the equivalent diameter of a channel having an arbitrary cross section.
8. Which formula is used for calculating convective heat transfer?
9. Which factors determine the heat-transfer coefficient?
10. What is the essence of the method of similarity for physical phenomena?
11. Which similarity criteria for convective heat transfer belong to the first group? Which similarity criterion belongs to the second group?
12. What is the free convection temperature drop?
13. How can the heat-transfer coefficient be determined for free convection?
14. How can the free convection heat transfer in air gaps be determined?
15. Which formula is used for calculating the heat-transfer coefficient for forced convection?

Chapter Thirteen

BOILING AND CONDENSATION HEAT TRANSFER

13.1. Boiling Heat Transfer

Boiling of a liquid occurs at a constant temperature which depends on pressure. During this process, bubbles of the vapour are formed on the heating surface. If the temperature of the vapour generated in boiling is t_s, the average temperature of the boiling liquid and heating surface is always somewhat higher than t_s. The difference between the average temperature of liquid and the temperature of steam is $\Delta t = (0.2\text{-}2)$ °C. The temperature t_w of the surface in contact with the boiling liquid may exceed the average temperature of the boiling liquid by several tens of degrees.

An increase in the temperature difference between the surface and the boiling liquid intensifies boiling. At a certain value of temperature, nucleate boiling is replaced by film boiling, when the

formed bubbles coalesce and heat transfer abruptly decreases. Before this regime heat transfer corresponds to the maximum value of the heat-transfer coefficient, and is called the *limiting heat transfer*. The maximum heat flux in nucleate boiling is called the *critical heat flux* and is denoted by q_{cr_1}. For water under atmospheric pressure its value is $q_{cr_1} \simeq 1.2 \times 10^6$ W/m^2. The critical temperature drop in this case is Δt_{cr_1} = (25 to 35) °C. An increase in the temperature drop to above Δt_{cr_1} leads to a transition from nucleate boiling to film boiling, accompanied by a sharp decrease in heat transfer. The minimal value of the heat flux per unit area for film boiling is called the *minimum heat flux* (q_{cr_2}). Film boiling of water under atmospheric pressure occurs at $\Delta t_{cr_2} = t_w - t_s = 150$ °C, i.e. at the surface temperature equal to 250 °C.

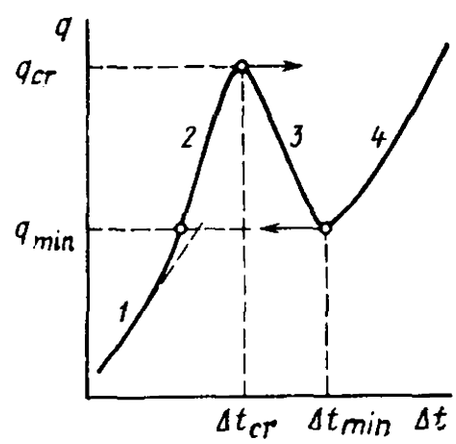

Fig. 29. Regimes of boiling: *1*—free convection (without boiling); *2*—nucleate boiling; *3*—transition boiling; *4*—film boiling.

Boiling heat flux per unit area q depends on the temperature drop. As Δt increases to Δt_{cr_1}, the heat flux also increases. It decreases in the interval between Δt_{cr_1} and Δt_{cr_2} and increases again as Δt increases further.

The transition regime between q_{cr_1} and q_{cr_2} is unstable. As the value of q becomes higher than q_{cr_1}, the temperature of the heating surface abruptly increases (because its cooling is deteriorated), and the film boiling sets in (unless the pipe wall burns out). A decrease in q during film boiling leads to the decrease in Δt down to Δt_{cr_2}. A further decrease in q causes a reverse transition from film boiling to nucleate boiling.

Figure 29 shows the dependence $q = f(\Delta t)$. The arrows indicate the actual directions of transition from nucleate regime to film boiling and vice versa. It should be noted that boiling is possible at a temperature of liquid below t_s. In this case, the bubbles of steam generated on the wall with temperature $t_w > t_s$ will condense in the subcooled liquid at a distance from the heating surface. This type of boiling is called *subcooled boiling*.

The heat transfer coefficient for nucleate boiling (W/(m^2·K)) is given by

$$\alpha = 143.2 \Delta t_s^{2.33} p^{0.5},$$

where Δt_s is the temperature drop (the difference in temperatures of the heating surface and the liquid) and p is the vapour pressure above the boiling liquid measured in mPa. The heat flux in boiling

is

$$q = \alpha \, \Delta t_s.$$

13.2. Condensation Heat Transfer

Condensation heat transfer occurs on the surface of a film flowing downwards from the heat-transfer surface. The heat transfer between condensing vapour and the surface depends on the thickness of condensate film on the surface. The roughness of the heat-transfer surface increases the thickness of the film and reduces heat transfer. If the vapour being condensed is in counter-flow to the condensate film, the film is decelerated and its thickness increases. This leads to a deterioration of heat transfer.

Condensation heat transfer is described by the expression

$$\mathrm{Nu_s} = A \, (\mathrm{Ga_s Pr_s K_s})^n,$$

where $\mathrm{Ga_s} = gl^3/\nu_s^2$, $\mathrm{Pr_s} = \nu_s/a_s$, $\mathrm{K_s} = r/[c_{p_m}(t_s - t_w)]$ and $\mathrm{Nu_s} = \alpha l/\lambda_s$ are similarity parameters; the subscript "s" indicates that the quantities are determined at the saturation temperature t_s; c_{p_m} is the specific heat of boiling liquid, and r is the latent heat of evaporation.

The reference length l is the diameter for a horizontal tube and the height for a vertical tube. For horizontal tubes, $A = 0.72$ and $n = 0.25$, while for vertical tubes and surfaces $A = 0.42$ and $n = 0.28$.

If the vapour contains air or other noncondensing gases, its condensation rate decreases. For example, condensation heat transfer decreases by about 60% if steam contains 1% of air. For this reason, air is continuously pumped out of industrial condensers.

Test Questions

1. What is the relation between the temperature of the vapour generated by boiling, the temperature of boiling liquid and the temperature of the heating surface?
2. How does an increase in the difference between the temperatures of heating surface and the boiling liquid affect the evaporation rate?
3. What do we mean by the critical and minimum heat fluxes?
4. How can the heat-transfer coefficient for nucleate boiling be calculated?
5. What determines the condensation heat transfer?
6. What is the effect of air contained in vapour on the condensation rate?
7. Which type of boiling is called subcooled?

Chapter Fourteen

HEAT TRANSFER BY RADIATION

14.1. Basic Concepts and Definitions

All bodies radiate energy at any temperature. The carriers of radiant energy are photons which have a momentum and an electromagnetic mass. The amount of energy radiated by a body increases with its temperature. Thermal radiation is characterized by the wavelengths ranging from 0.4 μm to 800 μm.

Solids and liquids radiate energy in a continuous spectrum of wavelengths ranging from the ultraviolet to infrared regions. On the other hand, gases emit and absorb energy only in certain wavelength regions. This type of radiation is called *selective*. Gases emit and absorb energy in the bulk.

When radiant energy Q is incident on a body, it is partially reflected (Q_R) and partially absorbed (Q_A), while a part of it (Q_D) diffuses through the body. Consequently,

$$Q = Q_R + Q_A + Q_D,$$

or, in dimensionless quantities, we have

$$Q_R/Q + Q_A/Q + Q_D/Q = R + A + D = 1.$$

The dimensionless quantities R, A and D are called the *absorptivity, reflectivity and diffusivity* respectively. The values of R, A and D depend on the material of the body. Different bodies exhibit different modes of interaction with radiant energy at different wavelengths. For example, liquids may be transparent to light rays, but they are always opaque to thermal radiation. White paper reflects visible light but absorbs infrared radiation. Window glass is transparent to light but is almost opaque to ultraviolet and infrared radiation.

For black bodies, $A = 1$. If $D = 1$, the body is perfectly transparent, or diathermic. For $R = 1$, we have a white body. When $A < 1$, the body is called grey. If a body were not exposed to external radiation, it would emit the so-called self-radiation E_1. However, the body under consideration practically always receives radiant energy E_2 from other bodies. In this case, if the body partially reflects the incident energy, the net radiation of the body, called the *effective radiation*, is given by

$$F_{ef} = E_1 + [1 - (A + D)]\, E_2.$$

For solid opaque surfaces $D = 0$, and hence

$$E_{ef} = E_1 + (1 - A)\, E_2.$$

The ratio of the flux density of self-radiation E_1 to the flux density E_0 of the black-body radiation is called the *emissivity factor*:

$$\varepsilon = E_1/E_0.$$

The value of ε varies from zero (for a white body) to 1 (for a black body).

In accordance with Kirchhoff's law, the ratio of the energy emitted by a body to its absorptivity is the same for all bodies and is equal to the self-radiation of the black body at the same temperature, i.e.

$$E_1/A_1 = E_2/A_2 = \ldots = E_0/A_0 = E_0 = f(T).$$

The Stefan-Boltzmann law states that the emissive power E_0 of a heated black body is proportional to the fourth power of the absolute temperature:

$$E_0 = \sigma_0 T^4 = c_0 (T/100)^4,$$

where σ_0 is Stefan's constant and c_0 is the emission coefficient.

For a black body, we have

$$\sigma_0 = 5.67 \times 10^{-8} \text{ W/(m}^2\cdot\text{K}^4), \quad c_0 = 5.67 \text{ W/ (m}^2\cdot\text{K}^4).$$

For grey bodies, the following relation holds:

$$E = c\,(T/100)^4 = c_0\varepsilon\,(T/100)^4,$$

where $\varepsilon = c/c_0 = E/E_0 = A$ is the emissivity factor of a body under consideration, which is numerically equal to its absorptivity.

If a body emits energy Q_n along the normal to its surface, then, in accordance with Lambert's law, the energy emitted at an angle φ to the normal is

$$Q_\varphi = Q_n \cos\varphi.$$

14.2. Heat Transfer Between Two Bodies by Radiation

Resultant heat flux between two surfaces whose areas are sufficiently large in comparison with the distance between them is described by

$$q_{1-2} = \varepsilon_r c_0 [(T_1/100)^4 - (T_2/100)^4], \tag{14.1}$$

where $\varepsilon_r = 1/(1/\varepsilon_1 + 1/\varepsilon_2 - 1)$ is the reduced emissivity of the system of bodies, and ε_1 and ε_2 are the emissivity of the surfaces under consideration.

If a body with surface area F_1 is inside another body with internal surface area F_2 and there is heat transfer between the surfaces, formula (14.1) is valid for this case also. The value of ε_r appearing in this formula should be taken in the form

$$\varepsilon_r = 1/\{(1/\varepsilon_1) + (F_1/F_2)[(1/\varepsilon_2) - 1]\}.$$

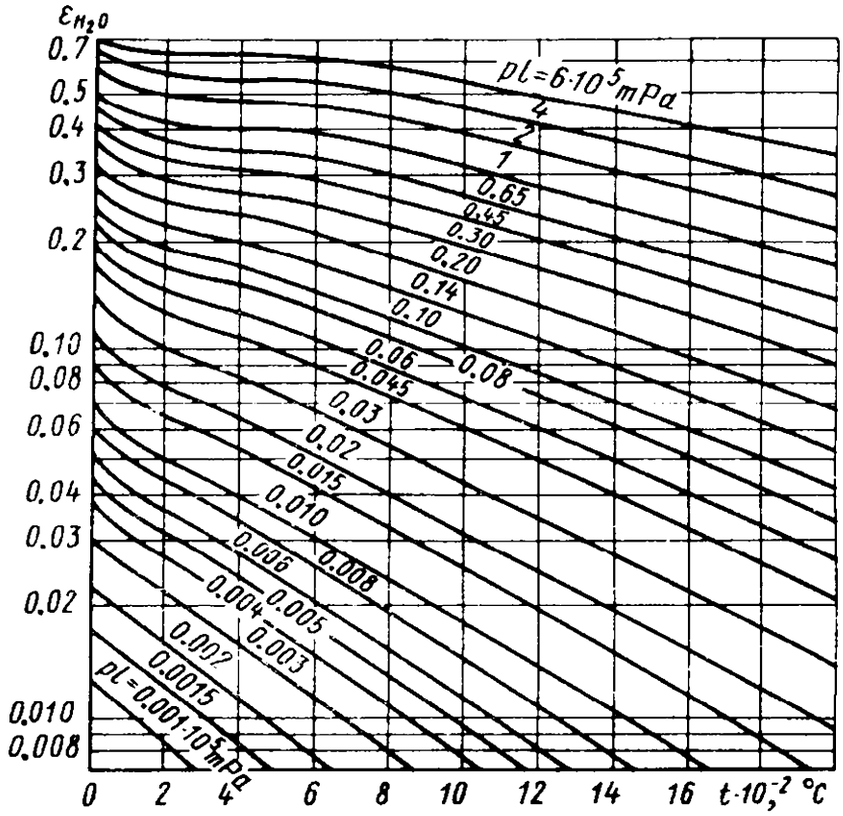

Fig. 30. Nomograms of the emissivity for H_2O.

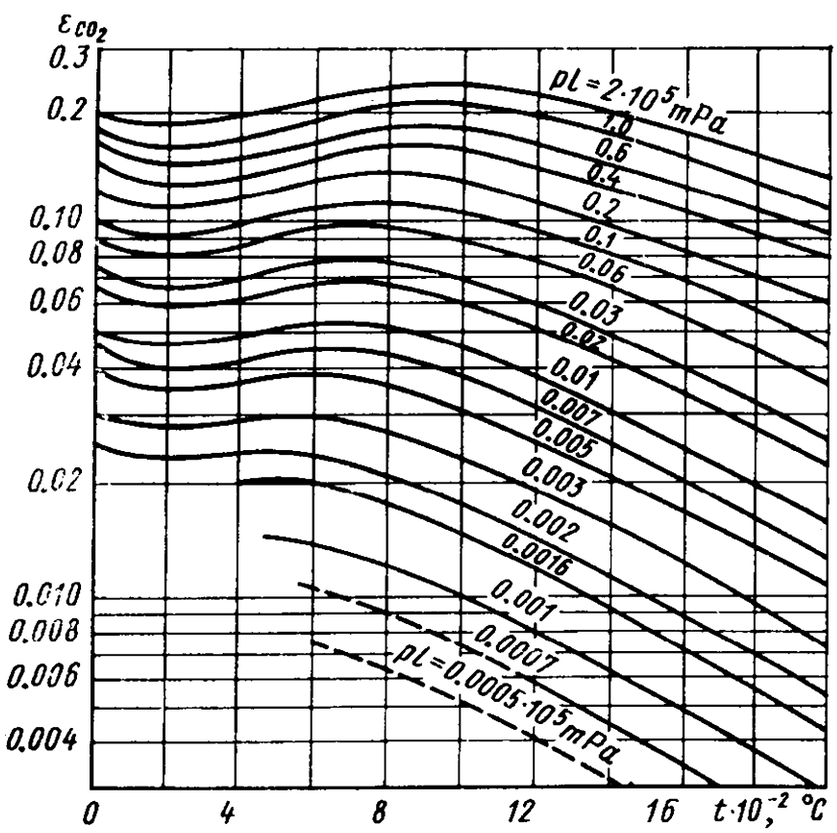

Fig. 31. Nomograms of the emissivity for CO_2.

It follows from formula (14.1) that radiative heat transfer is intensified by increasing either the temperature of the emitting body or the reduced emissivity. In order to reduce the radiative heat transfer among bodies, the temperature of the emitting body or the reduced emissivity should be decreased. If this is practically impossible, the heat transfer of an emitting body can be reduced by mounting a screen between the bodies. For example, if radiative heat transfer between two plane parallel surfaces takes place, it can be reduced to a half of its initial value by mounting between the surfaces a thin plane screen (parallel to them) made of a metallic sheet with the same emissivity as that of the surfaces under consideration. Two screens mounted between the plates can reduce the radiative heat transfer to 1/3 of the initial value, while n screens reduce the heat transfer by a factor of $(n + 1)$. This method is widely used for reducing the radiative heat transfer between an emitting body and the shell of a high-temperature vacuum apparatus where convective heat transfer is absent.

14.3. Thermal Radiation of Gases

Radiative heat transfer between a gas and its shell with a temperature T_w is described by the following relation:

$$q = \varepsilon'_w \varepsilon_g c_0 \left[(T_g/100)^4 - (T_w/100)^4\right],$$

where $\varepsilon'_w = 0.5\,(1 + \varepsilon_w)$ is the effective emissivity of the shell and

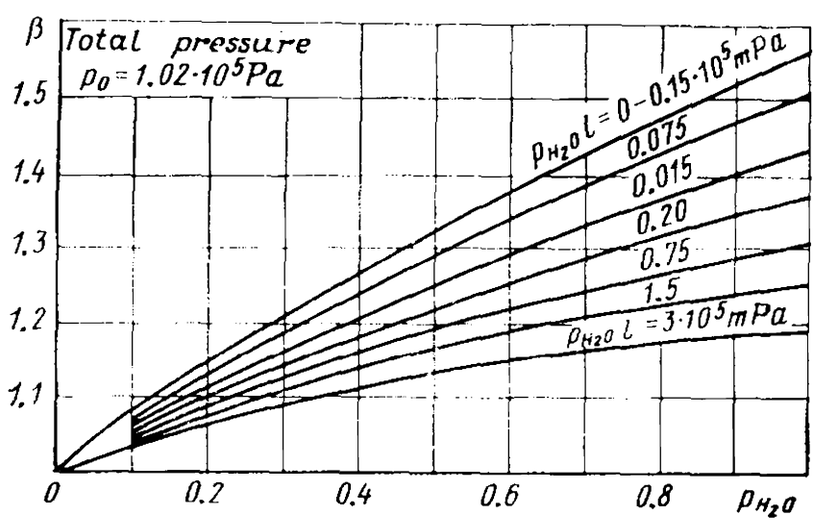

Fig. 32. Nomogram for determining the coefficient β of water vapour radiation.

ε_g and T_g are the emissivity and the absolute temperature of the gas respectively.

The emissivity of a gas can be determined with the help of nomograms shown in Figs. 30-32, which take into account the partial pressure of the emitting body and the mean length l of the beam

path,

$$l = 3.6 \ V/F,$$

where V is the volume of the emitting gas and F is the surface area of the shell.

If an emitting gas contains water vapour and carbon dioxide, the emissivity for such a mixture is

$$\varepsilon = \beta\varepsilon_{H_2O} + \varepsilon_{CO_2},$$

where ε_{H_2O} is the emissivity of water vapour.

The values of ε_{H_2O} and ε_{CO_2} are determined with the help of the graphs shown in Figs. 30 and 31. The value of ε_{H_2O} determined from the graph in Fig. 30 should be multiplied by the correction factor, determined from Fig. 32.

Test Questions

1. What is the difference between radiation of gases and radiation of liquids and solids?
2. Give the definitions of absorptivity, reflectivity and transmittivity of a body.
3. Which bodies are called white and black?
4. What do we call effective radiant power?
5. What is the emissivity of a body? Which bodies are called grey?
6. What does the Stefan-Boltzmann law establish?
7. What does Lambert's law establish?
8. What is the ratio of the self-radiation power of a body to its absorptivity equal to?
9. How can we determine the radiative heat transfer between two surfaces?
10. What is the emissivity of a gas?

Chapter Fifteen

OVERALL HEAT TRANSFER

15.1. Combined Heat Transfer

If there are two or three modes of heat transfer in a system, we deal with *combined heat transfer*. While calculating combined heat transfer, heat fluxes are summed up. Heat fluxes due to conduction and convection are combined into a single flux q_c due to convective heat

transfer, to which the radiation heat flux q_r is added:

$$q_0 = q_c + q_r = (\alpha_c + \alpha_r)(t_f - t_w) = \alpha_0 (t_f - t_w), \qquad (15.1)$$

where α_0 is the net heat-transfer coefficient, t_f and t_w are the temperatures of the fluid and the wall.

The radiant component of heat transfer in formula (15.1) is determined by the quantity α_r:

$$\alpha_r = (\varepsilon c_0/10^8)(T_f^4 - T_w^4)/(T_f - T_w) = \varepsilon c_0 \Theta,$$

where

$$\Theta = (1/10^8)(T_f^3 + T_f^2 T_w + T_f T_w^2 + T_w^3).$$

If formulas of radiative heat transfer are used for calculations, the convective component can be taken into account as follows:

$$q_0 = (\varepsilon + \varepsilon_c)\, c_0\, [(T_f/100)^4 - (T_w/100)^4],$$

where ε_c takes into consideration the convective heat transfer:

$$\varepsilon_c = \alpha_c (T_f - T_w) \Big/ \left\{ c_0 \left[\left(\frac{T_f}{100}\right)^4 - \left(\frac{T_w}{100}\right)^4 \right] \right\} = \alpha_c / c_0 \Theta.$$

15.2. Overall Heat Transfer Through a Wall

The transport of heat from one heat-transfer agent to another through a solid wall is called *overall heat transfer*. The temperatures of the hot and cold heat-transfer agents are denoted by t_{f_1} and t_{f_2}. Accordingly, the heat-transfer coefficient from the hot fluid to the wall is denoted by α_1, and from the wall to the cold fluid, by α_2.

Figure 33 represents the temperature variation in the process of overall heat transfer through a plane one-layer wall. In a steady-state heat transfer, the heat supplied to the surface of the wall is equal to the heat transmitted across the wall and to that removed from the wall by the cooling agent.

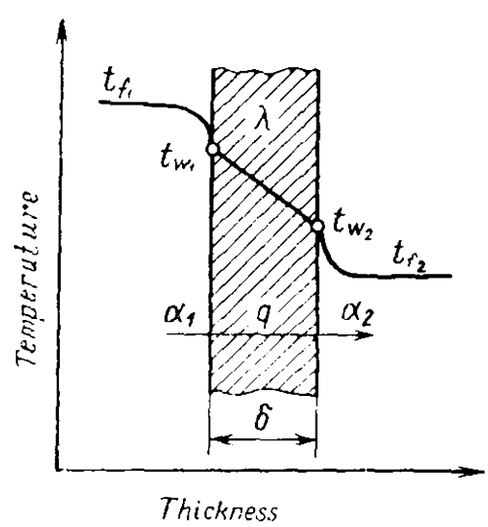

Fig. 33. Temperature variation during overall heat transfer through a one-layer wall.

This allows us to write three equations for the heat flux:

$$\left.\begin{aligned} q &= \alpha_1 (t_{f_1} - t_{w_1}); \\ q &= \frac{\lambda}{\delta}(t_{w_1} - t_{w_2}); \\ q &= \alpha_2 (t_{w_2} - t_{f_2}). \end{aligned}\right\} \text{I}$$

These equations can be used for determining the temperature differences:

$$\left.\begin{aligned} t_{f_1} - t_{w_1} &= \frac{q}{\alpha_1}; \\ t_{w_1} - t_{w_2} &= \frac{q\delta}{\lambda}; \\ t_{w_2} - t_{f_2} &= \frac{q}{\alpha_2}. \end{aligned}\right\} \text{II}$$

Adding equations I termwise, we obtain

$$t_{f_1} - t_{f_2} = q\,(1/\alpha_1 + \delta/\lambda + 1/\alpha_2).$$

Consequently, the heat flux is

$$q = (t_{f_1} - t_{f_2})/(1/\alpha_1 + \delta/\lambda + 1/\alpha_2) = k\,(t_{f_1} - t_{f_2}),$$

where $k = 1/(1/\alpha_1 + \delta/\lambda + 1/\alpha_2)$ is the *overall heat-transfer coefficient.*

The quantity $1/k$ is called the *overall heat transfer resistance.* For a multilayer plane wall, we have

$$1/k = 1/\alpha_1 + \sum_{i=1}^{n} \frac{\delta_i}{\lambda_i} + 1/\alpha_2.$$

The temperatures of the surfaces of a homogeneous wall are given by

$$t_{w_1} = t_{f_1} - q/\alpha_1, \quad t_{w_2} = t_{f_2} + q/\alpha_2.$$

Heat transfer through a one-layer cylindrical wall (tube) per unit length is

$$q_l = k_l \pi\,(t_{f_1} - t_{f_2}),$$

where

$$k_l = 1\Big/\left[1/\alpha_1 d_1 + \frac{1}{2\lambda}\ln(d_2/d_1) + 1/\alpha_2 d_2\right]$$

is the overall heat-transfer coefficient per unit length of the tube.

The temperatures of the inner and outer surfaces of the tube are given by

$$t_{w_1} = t_{f_1} - (q_l/\pi)\,(1/\alpha_1 d_1),$$

$$t_{w_2} = t_{f_2} + (q_l/\pi)\,(1/\alpha_2 d_2).$$

When heat is transferred through a multilayer cylindrical wall, e.g. a two-layer wall made of a metal and a heat insulating material with thermal conductivities λ_1 and λ_2 respectively and diameters d_1, d_2 and d_3, the amount of heat transported per unit length of the

tube per unit time is

$$q_l = \pi\,(t_{f_1} - t_{f_2})/[1/\alpha_1 d_1 + (1/2\lambda_1)\ln(d_2/d_1) + (1/2\lambda_2)\ln(d_3/d_2) + 1/\alpha_2 d_3].$$

The hot fluid-side temperature t_{f_1} is

$$t_{w_1} = t_{f_1} - (q_l/\pi)\,(1/\alpha_1 d_1).$$

The outer surface temperature is

$$t_{w_3} = t_{f_2} + (q_l/\pi)\,(1/\alpha_2 d_3).$$

The temperature on the boundaries between the thermal insulation layers and the plane wall can be calculated with the help of Eqs. (11.3) or (11.4), and for a cylindrical wall, by Eq. (11.7).

The amount of heat transferred per unit time through a spherical wall at the temperatures t_{f_1} and t_{f_2} and the heat-transfer coefficients α_1 and α_2 of heat-transfer agents is determined from the formula

$$Q = \pi\,(t_{f_1} - t_{f_2}) \Big/ \left[\frac{1}{\alpha_1 d_1^2} + \frac{1}{2\lambda}\left(\frac{1}{d_1} - \frac{1}{d_2}\right) + \frac{1}{\alpha_2 d_2^2}\right].$$

The temperature on the inner surface of the spherical wall is

$$t_{w_1} = t_{f_1} - Q/\alpha_1 \pi d_1^2.$$

The temperature on the outer surface is

$$t_{w_2} = t_{f_2} + Q/\alpha_2 \pi d_2^2.$$

Heat transferred through a finned wall whose finned surface area is F_2 and bare surface area is F_1 under steady-state conditions is given by

$$Q = 1/[1/\alpha_1 F_1 + (\delta/\lambda)\,(1/F_1) + 1/\alpha_2 F_2]\,(t_{f_1} - t_{f_2}) = k_{ov}\,(t_{f_1} - t_{f_2}),$$

where k_{ov} is the overall heat-transfer coefficient,

$$k_{ov} = 1\,[1/\alpha_1 F_1 + (\delta/\lambda)\,(1/F_1) + 1/\alpha_2 F_2],$$

δ is the thickness of bare part of the wall, α_1 and α_2 are the heat-transfer coefficients for the surfaces F_1 and F_2 respectively.

If calculations are referred to a unit of bare surface, we obtain

$$q_1 = Q/F_1 = k_1\,(t_{f_1} - t_{f_2}),$$

where

$$k_1 = 1/[1/\alpha_1 + \delta/\lambda + (1/\alpha_2)\,(F_1/F_2)].$$

Calculating per unit finned surface, we get

$$q_2 = Q/F_2 = k_2\,(t_{f_1} - t_{f_2}),$$

where

$$k_2 = 1\Big/\left[\left(\frac{1}{\alpha_1}+\frac{\delta}{\lambda}\right)\frac{F_2}{F_1}+1/\alpha_2\right].$$

It should be borne in mind that the above relations for the analysis of heat transfer of a finned surface were obtained in the assumption that the finned surface has a uniform temperature. Actually, the temperature varies along the fin height, and to ensure the accuracy of calculations a coefficient is introduced, which takes into account the deviation of the average temperature of a fin from the rated value (equal to the temperature at the fin base).

15.3. Heat Insulation

Heat insulation is the term applied to any coating of a heat-delivery surface, which ensures the required reduction of heat transfer from the surface to the surrounding medium or through a given surface. The materials whose thermal conductivity is less than 0.2 W/ (m·K) can be considered heat-insulating. Since thermal conductivity of these materials is temperature-dependent and increases with temperature, the average temperature of an insulating layer should be used for determining its thermal conductivity required for the calculation of heat insulation under operating conditions. The design of heat insulation is usually reduced to finding its thickness. This can be done as follows.

First the admissible heat loss q from unit surface (of a plane wall) or unit length of a tube through the outer surface of a heat insulation is established. Then the calculated value of temperature t_2 of the outer surface of the heat insulation is determined.

Since $q = \alpha\,(t_2 - t_{air})$, where t_{air} is the temperature of the surrounding air, we have

$$t_2 = t_{air} + q/\alpha.$$

It is assumed that the temperature of the inner surface of heat insulation is equal to that of the heat-transfer agent flowing past the opposite side of the surface being insulated (if the thermal resistance of the wall can be ignored), while the temperature of the outer surface of heat insulation is taken in accordance with specifications. The mean temperature of the insulation layer is assumed to be the arithmetic mean of the temperatures at its surfaces. The value of λ_{in} is taken from reference tables or diagrams in accordance with the mean temperature of insulation. Then, using the formulas for calculating the overall heat transfer for a plane wall or a tube, the required thickness of heat insulation is determined.

The thickness of thermal insulation for a tube is found from the ratio of the outer diameter d_2 to the inner diameter d_1 of the insulation,

taking into account the admissible loss of heat q_l per unit length of the tube, the surface temperatures t_1 and t_2 of the insulation and its thermal conductivity λ_{ins}:

$$\ln (d_2/d_1) = [2\pi\lambda_{ins} (t_1 - t_2)]/q_l.$$

The thickness of the insulation for a plane wall is given by

$$\delta_{ins} = (\lambda_{ins}/q) (t_1 - t_2).$$

It should be borne in mind that when a heat insulation is used in a pipe line, the outer surface of the thermally insulated pipe increases, and heat losses may increase instead of decreasing if the insulating material is chosen incorrectly. A comparison of the heat transfer of insulated and noninsulated pipe-lines leads to the following condition for the quality of insulation:

$$\lambda_{ins} < 0.5\alpha_2 d_2,$$

where α_2 is the heat-transfer coefficient from the outer surface of heat insulation to the surroundings and d_2 is the outer diameter of the noninsulated pipe line.

This inequality shows that the smaller the diameter of the pipe line being insulated, the smaller should be the thermal conductivity of an insulating material, i.e. the higher should be the quality of the insulation. If this inequality is not satisfied, the heat insulation layer will facilitate an increase in the heat losses to the surroundings. These losses will only drop when the thickness of the insulation layer increases.

The outer diameter d'_{ins} of the insulation layer with an incorrectly chosen thickness, for which heat losses attain the maximum value, is called the *critical diameter of heat insulation*:

$$d'_{ins} = 2\lambda'_{ins}/\alpha_2,$$

where λ'_{ins} is the thermal conductivity of the material.

Test Questions

1. Which type of heat transfer is called combined heat transfer?
2. How is the radiative component of combined heat transfer taken into account?
3. How is the convective component of combined heat transfer taken into account?
4. How can we determine the overall heat-transfer coefficient for a plane wall?
5. How is the heat-transfer coefficient for a monolayer plane wall determined?

6. How is the heat transfer through a finned wall calculated?
7. Which materials are considered to be heat-insulating?
8. How is heat insulation designed?

Chapter Sixteen

HEAT EXCHANGERS

16.1. Types of Heat Exchangers

Heat exchangers are the devices for heat transfer from one heat-transfer agent to another. Depending on the operation principle, heat exchangers are divided into direct-contact and shell-and-tube

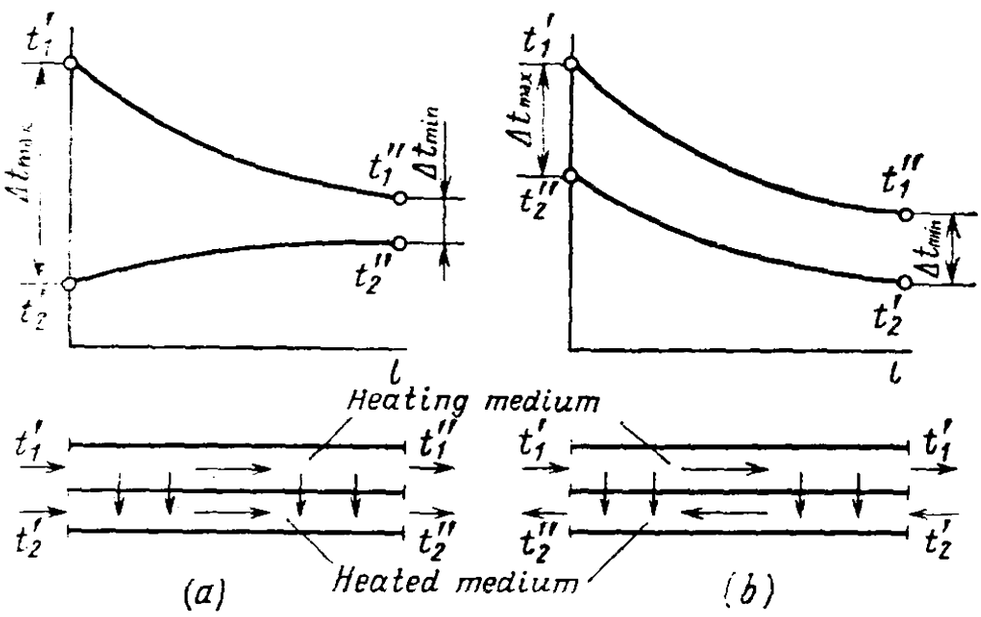

Fig. 34. Temperature curves for recuperative heat exchangers: (*a*) with cocurrent system; (*b*) with countercurrent system.

type heat exchangers which, in turn, are subdivided into recuperative and regenerative heat exchangers. In shell-and-tube heat exchangers, the heat is transferred from a hot to a cold medium through the wall separating them. In a recuperative apparatus, the heat flows through the wall in one and the same direction from the heating medium to the medium being heated. In regenerative heat exchangers, hot and cold fluids alternately flow across the wall or packing. In direct-contact heat exchangers, the cold medium is mixed with the hot fluid.

In thermal power plants, recuperative heat exchangers are normally used. If hot and cold media flow in the same direction, such apparatuses are called *cocurrent heat exchangers*. If these flows have

opposite directions, we have a *countercurrent heat exchanger*. Figure 34 shows these two systems and the temperature dependences for heat-transfer agents.

16.2. Calculation of the Heat-exchanger Parameters

Thermal design. In order to design a recuperative heat exchanger, we write two equations:

the heat balance equation

$$Q = G_1 c_{p_1} (t_1' - t_1'') = G_2 c_{p_2} (t_2'' - t_2')$$

and the overall heat-transfer equation

$$Q = kF\,\overline{\Delta t},$$

where G and c_p are the flow rates and specific heats of heat-transfer agents, t' and t'' are their initial and final temperatures, k and F are the overall heat-transfer coefficient and the calculated surface area of a heat exchanger, $\overline{\Delta t}$ is the average temperature drop for heat-transfer agents, which is determined by the formula

$$\overline{\Delta t} = (\Delta t_{max} - \Delta t_{min})/2.3 \log (\Delta t_{max}/\Delta t_{min}),$$

where Δt_{max} and Δt_{min} are the maximum and minimum temperature drops for heat-transfer agents at the inlet and outlet of the heat exchanger.

Figure 34 shows how Δt_{max} and Δt_{min} can be determined graphically.

The heating surface F of a heat exchanger is given by

$$F = Q/k\,\overline{\Delta t} = (Q/k)\ [2.3 \log (\Delta t_{max}/\Delta t_{min})]/[\Delta t_{max} - \Delta t_{min}].$$

The final temperatures of heat-transfer agents are given by

$$t_1'' = t_1' - (Q/G_1 c_{p_1});$$

$$t_2'' = t_2' + (Q/G_2 c_{p_2}).$$

If the temperature of heat-transfer agents varies insignificantly over the heating surface, the average temperature drop can be determined as the arithmetic mean of the temperature drops Δt_{max} and Δt_{min}, i.e.

$$\overline{\Delta t} = 0.5\,(\Delta t_{max} + \Delta t_{min}).$$

The arithmetic mean value of the temperature drops is always somewhat greater than the logarithmic mean.

The exact calculation of temperature drop for cocurrent- and cross-countercurrent flow heat exchangers is a complicated problem. Such apparatuses are designed with the help of countercurrent flow

formulas by introducing a correction factor into $\overline{\Delta t}$, which is determined from special graphs contained in reference books on heat transfer.

If a heat exchanger is a complex device for which the net value of the overall heat-transfer coefficient cannot be easily calculated, its values for separate parts of the heat-transfer surface are determined and introduced into the formula

$$k = (k_1F_1 + k_2F_2 + \ldots + k_nF_n)/(F_1 + F_2 + \ldots + F_n) = \sum_{i=1}^{n} k_iF_i \Big/ \sum_{i=1}^{n} F_i,$$

where k_i is the heat-transfer coefficient for surface F_i.

Regenerative heat exchangers are designed on the basis of the mean value of the heat-transfer coefficient k_c for a cycle of operation of the regenerator. The calculation involves the determining of periods τ_1 and τ_2 of heating and cooling of the packing. The duration of a cycle is $\tau = \tau_1 + \tau_2$.

The mean value of the calculated overall heat-transfer coefficient for a cycle is approximately given by

$$k_c = 0.8 \Big/ \left(\frac{1}{\alpha_1\tau_1} + \frac{1}{\alpha_2\tau_2}\right),$$

where α_1 and α_2 are the convective heat-transfer coefficients for the heating and cooling period respectively.

The overall heat-transfer equation for a cycle is

$$Q_c = k_c\,(t_1 - t_2)\,F\tau,$$

where F is the design surface of the regenerator, m^2.

Hydraulic design. The design of a heat exchanger includes the calculation of the power of a pump or a fan required for the displacement of heat-transfer agents in the apparatus.

The driving power of a fan or a pump is given by

$$N = V\,\Delta p/\eta,$$

where V is the volume flow rate of a heat-transfer agent, Δp is the pressure drop in the heat-transfer agent and η is the efficiency of the pump or fan.

In order to calculate the driving power of a pump or a compressor, we must know the heat exchanger hydraulic resistance with respect to the heat-transfer agent under investigation. The hydraulic resistance of the fluid flow is the sum of the friction resistance (over the channel length) and the local resistance. The friction resistance in the channels due to viscosity of the heat-transfer agent is given by

$$\Delta p_{fr} = \xi\,(l/d)\,(\rho w^2/2),$$

where ξ is the friction coefficient, l is the channel length, d is the equivalent diameter, ρ is the density of the heat-transfer agent, and w is the average linear velocity.

The local resistance due to a change in the channel cross section (abrupt or smooth) at the entrance or exit of the channel is

$$\Delta p_{loc} = \zeta\,(\rho w^2/2),$$

where ζ is the coefficient of local resistance, determined from the reference tables.

The net resistance of the heat-transfer agent is given by

$$\Delta p = \Delta p_{fr} + \sum \Delta p_{loc}$$

(in this formula we disregard the energy required for accelerating the heat-transfer agent under nonisothermal conditions).

The friction resistance coefficient for an isothermal laminar flow of the heat-transfer agent is

$$\xi_0 = A/\mathrm{Re}_f.$$

Here we give the values of coefficient A for different channel cross sections.

The shape of channel cross section	A
Circle	64
Square	57
Equilateral triangle	53
Ring	96
Rectangle for $a/b \simeq 0$ (slot)	96
$a/b = 0.25$	73
$a/b = 0.5$	62

For a turbulent flow (Re is up to 1×10^8), we have

$$\xi_0 = 0.86/(\log \mathrm{Re})^{2.4}.$$

For a nonisothermal flow, the value of the friction resistance coefficient is determined from the formula

$$\xi = \xi_0\,(\mathrm{Pr}_w/\mathrm{Pr}_f)^{0.33}.$$

The resistance of bundles of pipes for a cross-flow is treated as alternating local resistances of the converging and diverging flows. The local resistance coefficient (net value for a bundle) is given for staggered arrangement by

$$\zeta = (5.4 + 3.4m)\,\mathrm{Re}_f^{-0.28}, \tag{16.1}$$

for netlike arrangement by

$$\zeta = (6 + 9m)\,(x_1/d)^{-0.23}\,\mathrm{Re}_f^{-0.26}. \tag{16.2}$$

The design velocity in these formulas corresponds to the smallest flow area. The reference length is the diameter d of the pipes, m being the number of rows of pipes along the heat-transfer agent flow.

If the flow of heat-transfer agent is not perpendicular to the pipe generatrix (the direction of the flow forms an acute angle with the pipe axis), the design value of ζ is calculated from formulas (16.1) and (16.2) and then multiplied by the correction factor ε. The value of this factor is determined from the following dependence on the angle φ:

φ° . . .	90	80	70	60	50	40	30	10
ε . . .	1	1	0.95	0.83	0.69	0.53	0.38	0.15

Test Questions

1. Which types of heat exchangers are distinguished according to the operation principle?
2. Which recuperative heat exchangers are called cocurrent and countercurrent?
3. Which equations are used for designing a recuperative heat exchanger?
4. How is the average temperature drop determined in the heat exchanger design?
5. What is the difference between the designs of regenerative and recuperative heat exchangers?
6. How is the overall heat-transfer coefficient for a regenerative heat exchanger determined?
7. How do we determine the power required for the displacement of the heat-transfer agent in a heat exchanger?
8. Which formulas are used for calculating the resistance to the heat-transfer agent flow?
9. How are the local resistances estimated?

Chapter Seventeen

MODELLING AND EXPERIMENTAL INVESTIGATION OF HEAT EXCHANGERS

17.1. Formulation of the Problems and Modelling Conditions

The design methods considered above for heat conduction, convective and radiative heat transfer, and for overall heat transfer show that analytic and empirical relations are applicable only for the

most typical cases of flow and heat transfer. In practical situations, these relations are often inapplicable since many heat exchangers differ in the nature of the flow of heat-transfer agents and in their configuration from those for which the empirical formulas have been obtained by analysing the experimental data. Therefore, empirical formulas cannot be used for designing heat-engineering equipment with the required accuracy. In such cases, new dependences should be derived from an analysis of experimental results.

The so-called full-scale experiment, i.e. the testing of an approximately designed unit in actual size for obtaining more accurate analytical dependences is very complicated and expensive. For this reason, the method of physical modelling is widely used; it consists in testing a simplified scale model which reproduces on a certain scale the geometry and nature of the heat-transfer agent flow in the full-scale unit.

The required dependences for heat transfer and hydraulic resistance can be obtained by modelling only if there is geometrical similarity in the model as well as similarity in the flow of the heat-transfer agent, similarity of physical parameters of heat-transfer agents at corresponding points of the model and the prototype, similarity of temperature fields on the boundaries, and the equality of independent similarity parameters (Re for forced flow and GrPr for free flow).

It should be noted that the exact fulfilment of all similarity conditions is possible only in rare cases. An approximate similarity of processes is the most likely situation.

In some cases, similarity can be attained more easily since at comparatively high values of Re, the velocity distribution in a flow becomes independent of Re, i.e. the so-called *self-similarity regime* of the heat-transfer agent flow sets in. In this regime, the pressure loss coefficient becomes constant and independent of Re.

In modelling heat-transfer phenomena, the geometrical similarity of channels and inlet and outlet conditions for heat-transfer agents can be attained rather easily by constructing a geometrically similar reduced (or magnified) model. It is much more difficult to ensure the similarity of physical parameters, viz. density, viscosity, thermal conductivity and heat capacity.

In accordance with the similarity principle, the ratio of the values of these parameters in the model and the prototype must be the same at all geometrically similar points. Since this requirement is difficult to fulfil, the process reproduced in the model usually corresponds to a certain average temperature of the heat-transfer agent in the prototype. The similarity of temperature fields on the boundaries is also difficult to attain. Therefore, the so-called method of local modelling is frequently used. According to this method, the similarity of temperature fields is ensured only on a certain part of the

boundary surface. By analyzing the operation of separate parts of a unit, averaged dependences for the entire unit are obtained.

It is also difficult to fulfil the requirement of the equality of independent dimensionless numbers for the model and the prototype. This requirement can be met only in the modelling of isothermal flows of heat-transfer agents. Approximate similarity of phenomena makes it possible in many cases to replace a full-scale experiment by a simpler model experiment.

17.2. Experimental Investigation of Heat Exchangers

Experimental investigation is carried out for studying physical processes occurring in heat exchangers and for obtaining analytical relations between the independent and dependent dimensionless numbers. The processes in heat exchangers are complex physical phenomena. For this reason, individual processes should be modelled and studied independently in the investigation of these phenomena.

The analysis of fluid flows in heat exchangers is usually made on transparent models by tracing liquid flows with the help of aniline paint jets or by air filaments injected into the flow of fluid. Separate air bubbles formed in the filaments trace the steam lines of a heat-transfer agent. The velocity of the heat-transfer agent flow is registered by hotwire anemometers or head meters. The hydraulic resistance in the flow is determined from the static pressure drop in the heat-transfer agent.

For measuring temperature, thermocouples and resistance thermometers are most frequently used. Laboratory thermometers with the scale division of 0.01 °C are also used for this purpose.

Thermocouples intended for measuring temperature should be calibrated in accordance with the fusion and boiling points of chemically pure substances with the help of standard thermocouples and thermometers in an oil bath or electric furnace under steady-state conditions. When the temperature of a gaseous medium is measured, possible errors due to radiative heat transfer between the sensitive element of a measuring device (bulb of a thermocouple or thermometer) and the walls of the channel in which the heat-transfer agent temperature is being measured should be taken into account. In such cases, thermocouples and thermometers are screened.

The special attention should be paid to the nonuniformity of temperature fields when the average temperature of the flow is being determined. In this case, a thorough mixing in the flow in front of the measuring device should be ensured.

When the temperature of a surface in a heat exchanger is measured, not only the bulb of a thermocouple but also a considerable length of connecting wires (up to 50 mm) should be embedded in the material of the wall whose temperature is being measured.

The amount of heat supplied or removed in the process is calculated as the product of the mass flow rate, specific heat and temperature difference of the heat-transfer agent on the region under consideration.

Electric heating is widely used in modelling. This method makes it possible to exactly calculate the amount of supplied heat from the measurements of electric power. When superheated steam is used for heating, the amount of supplied heat can also be determined quite accurately. It is determined from the difference in enthalpies of the superheated steam and the condensate flowing out of the heater.

Test Questions

1. Which requirements must be satisfied by a model of heat exchanger?
2. What characterizes the self-similar flow of a heat-transfer agent?
3. What does the method of local modelling consist in?

Part Three

FUNDAMENTALS OF HEAT ENGINEERING

Chapter Eighteen

BASIC CONCEPTS. FUEL. COMBUSTION. FURNACES

18.1. Basic Concepts. Classification of Fuel

Scientific progress involves the following three main stages: the theoretical knowhow, the materials and energy. The first stage, the theoretical knowledge, is the key to natural resources and energy. A knowledge of the laws of nature not only enables us to use the natural resources, but also determines the level of economical well-being of the human race. The materials are the elements which form the basis of machines and mechanisms, buildings and structures. However, the implementation of the laws of nature and large-scale exploitation of natural resources are possible only when energy is available. The main source of energy in the Universe is the Sun. Under terrestrial conditions, energy is obtained by transformation from other forms of energy stored in natural reservoirs at different spots on the Globe. At the present time, energy is obtained from the chemical energy of fuel, atomic energy, hydroelectric energy, wind energy, the energy of ebbs and tides in the sea, geothermal energy and the energy of solar radiation. The most widely harnessed sources of natural energy are: the chemical energy of fuel, atomic energy and hydraulic energy. The installations at which the energy of natural resources is transformed into electric power are called power plants. Besides electric power, natural energy is also transformed into heat in heat-generating plants: steam- and hot-water boilers, furnaces for various purposes, driers, etc.

The efficiency of utilization of natural resources of energy is equal to the product of the efficiencies of the individual stages in the chain of energy conversion:

$$\eta = \eta_1 \cdot \eta_2 \cdot \eta_3 \cdot \ldots \eta_n,$$

where $\eta_1, \eta_2, \eta_3, \ldots, \eta_n$ are the efficiencies of individual stages. Obviously, the larger the number of stages of energy conversion and the higher the losses at each stage, the lower the efficiency of utilization of primary energy resources and hence, the higher the losses connected with their production and processing. Besides, a low ef-

ficiency of utilization of primary resources leads to their rapid exhaustion.

Power-generating fuels are combustible materials which can be used economically for generating heat in large quantities. Depending on their physical state, fuel is classified as *solid, liquid or gaseous.* Fuel suitable for use in industry in the form in which it occurs in nature is called *natural fuel.* Fuel which has to be processed from the naturally available fuel is called *prepared fuel.* Solid natural fuel includes brown and hard coal, combustible shale, peat, wood, etc. Prepared solid fuel includes coke, semi-coke, wood charcoal, briquettes, etc. Petroleum is fuel in natural form. Prepared fuels in liquid form (petrol, kerosene, fuel oil, etc.) are obtained by refining natural oil. Natural fuel in gaseous form includes natural gas, while prepared fuel of this type can be in the form of coke-oven gas, blast-furnace gas, lighting gas, producer gas, petroleum gas, etc. Fuel can be also classified according to thermal stability, yield of volatile, moisture content, ash content, coke-residue characteristic, or the form in which it is used.

Peat, brown coal, hard coal and anthracite were formed from extinct vegetative matter as a result of transformation under various natural conditions (pressure, temperature, medium). Crude oil in natural form is a mixture of hydrocarbons, and a certain amount of liquid oxygenous, sulphurous and nitrogenous compounds.

According to the organic theory of origin of petroleum, it was formed from vegetative and animal organisms which settled at the bottom of the sea and were subjected to the action of various biochemical and geological processes. The formation of petroleum was accompanied by the generation of natural gas. The heavier components of the gas were dissolved in the crude, while the lighter components were concentrated above its level. These gases formed large deposits by penetrating porous rocks and migrating to places that are far from the place of their origin.

At the present stage of scientific and technical advancement, power engineering is mainly based on organic fossil fuel (coal, petroleum and gas). During the past eighty years, the energy balance of the world reached 10 billion tons of equivalent fuel. Since 1950's, the annual consumption of energy resources rose on the average by 4.5%. During this period, the fraction of petroleum and gas in the fuel-energy balance rose from 42% to 65%. According to the forecasts of the World Energy Conference, an annual increase of about 2.5% in the fuel consumption is expected in the next 40 years and the fuel energy balance is likely to reach 17-18 billion tons of equivalent fuel by the year 2000. According to the data published by this conference in 1980, the total fuel reserves stand at 13.1 trillion tons of equivalent fuel, of which coal constitutes 83%. The total extractable fuel resources are about 7 trillion tons, of which about 1 tril-

lion ton has already been explored (7% petroleum, 9% shale and bituminized oil, 5% natural gas and 79% coal). About 40% of the mineral resources of solid fuel are in the Soviet Union, 30% in USA, 15% in Asia, and 5% in Europe. The following table gives the data on the inferred reserves of fuel in the world.

Table. World inferred reserves of fuel in billion tons of equivalent fuel

Types of reserves	Explored and blocked-out reserves	Prospected reserves	Total
Petroleum	128	303	431
Condensate	9	17	26
Natural gas	100	258	358
Shale oil	66	420	486
Bituminized oil	58	109	167
Coal	687	4813	5500
Total	1048	5920	6968

A large share of world's resources of solid fuel falls in the USSR, USA, Great Britain, West Germany, India, China, South Africa, Botswana, Indonesia and Brazil. About 75% of the total mineral resources of solid fuel consists of hard coal, while brown coal constitutes about 25%. The largest resources of petroleum are in the region of the Persian Gulf and in north Africa. Large reserves of oil have been found in the North Sea, Mexican and Persian Gulfs, and in Alaska. Considerable reserves are expected to be discovered in the tropical part of South America and on the Western coast of Africa. It should be noted that of the 8.8 billion tons of equivalent fuel consumed in the world in 1978, over 38% was covered by imports. The main exporters of the liquid fuel are the members of the Organization of Petroleum Exporting Countries (OPEC), viz. Iraq, Iran, Qatar, Kuweit, United Arab Emirates, Saudi Arabia, Algeria, Gabon, Libya, Nigeria, Venezuela, Indonesia, and Equador.

Natural gas occupies an important place in the fuel-energy balance of a number of countries. Large deposits of natural gas are concentrated in the USA, Holland, Canada, Great Britain, Algeria, Saudi Arabia, Australia, Venezuela, and other countries.

Huge reserves of solid, liquid and gaseous fuel are concentrated in the USSR. The Soviet Union possesses over 30% of the world's oil-producing areas, 25-30% of natural resources of gas, 55% coal and 60% peat.

18.2. Composition of Fuel and Its Characteristics

Fuel composition includes carbon C, oxygen O, nitrogen N and sulphur S in the form of complex chemical compounds. Besides, it contains water which will be denoted by W and mineral admixtures denoted by A. Gaseous fuel contains carbon monoxide CO, methane CH_4, hydrogen sulphide H_2S and hydrocarbons of the type C_nH_{2m}.

The elementary fuel composition can be given in terms of working, dry, combustible fuel or organic matter. It is given in percent by mass and can be represented in the form of the following equalities:

working fuel (as received)

$$C^w + H^w + O^w + N^w + S^w + A^w + W^w = 100\%;$$

dry (moisture-free) fuel

$$C^d + H^d + O^d + N^d + S_v^d + A^d = 100\%;$$

combustible (dry-and-ash-free) fuel

$$C^c + H^c + O^c + S_v^c + N^c = 100\%;$$

organic matter

$$C^o + H^o + N^o + O^o = 100\%,$$

where C^w, C^d, C^c are respectively the carbon contents in the working, dry, combustible fuels and C^o is the organic matter; H^w, H^d, H^c and H^o are the corresponding hydrogen contents, O^w, O^d, O^c and O^o are oxygen contents, N^w, N^d, N^c and N^o are nitrogen contents, S^w, S_v^d and S_v^c are sulphur contents, and A^w, A^d and W^w are the ash and water contents.

Here

$$S^w = S_v^w + S_m^w,$$

where S^w, S_v^w and S_m^w are the contents of sulphur, volatile sulphur and mineral sulphur respectively.

The elementary composition of various fuels is given in the reference tables. Table 4 contains formulas for recalculating the fuel composition for different masses.

For example, $C^w = C^c (100 - A^w - W^w)/100$, and so on.

The chemical composition of a gaseous fuel is given in percent by volume. All calculations associated with the composition of a gaseous fuel are made for 1 m^3 of dry gas under normal conditions. The content of water vapour and other admixtures (dust or tars) is given in g/m^3 of dry gas.

Carbon is the most important component of fuel. After complete combustion of 1 kg of carbon 34 100 kJ of heat are liberated. The higher the carbon content in a fuel, the more heat is liberated in

Table 4. Formulas for Recalculating Fuel Composition

Type of fuel	Factors for conversion to required mass			
	working fuel	dry fuel	combustible fuel	organic matter
Working fuel	1	$100/(100-W^w)$	$100/(100-A^w-W^w)$	$100/(100-S^w-A^w-W^w)$
Dry fuel	$(100-W^w)/100$	1	$100/(100-A^d)$	$100/(100-S^d-A^d)$
Combustible fuel	$(100-A^w-W^w)/100$	$(100-A^d)/100$	1	$100/(100-S^c)$
Organic matter	$(100-S^w-A^w-W^w)/100$	$(100-S^d-A^d)/100$	$(100-S^c)/100$	1

combustion. As a result of chemical treatment of a fuel, carbon enters into the composition of organic compounds formed. Another component of fuel is hydrogen. Oxygen and nitrogen belong to incombustible mass of fuel (ballast). Sulphur is contained in fuel in the form of iron pyrite (FeS_2, $FeSO_4$, and sulphur-containing organic compounds) and sulphates (calcium, magnesium and sodium sulphates). The amount of combustible sulphur in a fuel is determined as the difference between the total sulphur content and the amount of sulphates in it. The higher the moisture content in a fuel, the smaller the combustible part per unit mass.

Incombustible mineral admixtures also form a part of ballast in a fuel. A solid incombustible product of complete oxidation and decomposition of all mineral admixtures in a fuel is called *ash*. The amount of ash in combustion products and its quality should be taken into account while utilizing a fuel. After decomposition and fusion, ash is converted into a fused mass called *cinder*.

An important characteristic of fuel quality is the yield of volatile matter and the quality of coke. Volatile matter liberated during the heating of fuel includes the following gases: carbon monoxide, hydrogen, hydrocarbons, nitrogen, oxygen, carbon dioxide, etc.

The yield of volatile matter is determined in percent with respect to dry and ash-free fuel:

$$V^c = V^a\,[100/(100 - A^a - W^a)],$$

where V^a, A^a and W^a are the yield of volatiles, ash content and water content in the analytical test in percent.

The higher the yield of volatiles, the easier the ignition of fuel. The volatile yield forms the basis of classification of solid fuels.

18.3. Heat of Combustion of a Fuel

One of the most important characteristics of a fuel is its heat of combustion.

Heat of combustion is the amount of heat liberated upon complete combustion of 1 kg of solid (liquid) or 1 m^3 of a gaseous fuel. In practice, the heat of combustion is determined by calorimetric measurements. A certain amount of fuel is burnt in a closed vessel. The heat liberated during combustion is transferred to water through the vessel walls. If we know the amount of cooling water, the heat capacity of the vessel and the difference in the temperatures of water before and after heating, the heat of combustion of the fuel can be calculated.

There are two types of heat values: high heat value, Q_h, and low heat value, Q_l. The former is larger than the latter by the amount of heat spent in evaporating water from the as-received fuel and water obtained by burning hydrogen which is a fuel component.

There exists the following relation between the high and low heat values (in kJ/kg):

$$Q_l^w = Q_h^w - 224H^w - 25W^w.$$

In practical calculations, low heat value Q_l^w for the working (as-received) fuel is used.

The heat of combustion of a fuel can be calculated with the help of the following empirical formulas (in kJ/kg):

for solid and liquid fuels:

$$Q_l^w = 338C^w + 1025H^w + 108.5(O^w - S_v^w) - 25W^w;$$

for gaseous fuel

$$Q_l^w = 108H_2 - 126CO + 234H_2S + 358CH_4 + 638C_2H_6 + 913C_3H_8 + 1187C_4H_{10} + 1461C_5H_{12} + 591C_2H_4 + 860C_3H_6 + 1135C_4H_8,$$

where H_2, CO, H_2S, etc. are the contents of gases is a gas mixture in percent by volume under normal conditions.

For convenience of calculation and comparison of heat of combustion for different fuels, the concept of *fuel unit* (equivalent) is introduced. The heat of combustion of a fuel equivalent amounts to 29.3 MJ/kg (7000 kcal/kg).

In order to convert the rate of natural fuel to that of equivalent fuel, the thermal equivalent of fuel is used:

$$B_{eq} = B_n E,$$

where B_{eq} and B_n are fuel rates of equivalent and natural fuels respectively and E is the thermal equivalent of fuel:

$$E = Q_l^w/7000 \text{ if } Q_l^w \text{ is in kcal/kg}$$

or

$$E = Q_l^w/29.3 \text{ if } Q_l^w \text{ is in MJ/kg.}$$

Mixtures of fuels (solid fuels, solid fuels and liquid combustible wastes, solid and gaseous fuels) are used sometimes. The heat of combustion of a mixture of solid fuels or a solid and a liquid fuel is characterized by the heat of combustion and mass fractions of individual mixture components:

$$Q_{l.m}^w = g'Q_l^{wI} + (1-g')\,Q_l^{wII},$$

where g' is the mass fraction of a mixture component, Q_l^{wI} and Q_l^{wII} are the heats of combustion of the first and second component.

For a mixture of a solid and a gaseous fuel, we have

$$Q_{l.m}^w = Q_l^{wI} + kQ_l^{wII},$$

where k is the amount of gas per kilogram of solid or liquid fuel, m^3/kg.

The heat of combustion of the mixture in this case is measured in kcal/kg or MJ/kg.

Fuel wood includes firewood and waste wood from sawmills (sawdust, wood trimmings, chips, etc.). Firewood consists of nonindustrial wood. The heat of combustion of wood (in kJ/kg) is:

for firewood transported by land

$$Q_l^w = 18\,300 - 210\,W^w;$$

for floating firewood

$$Q_l^w = 16\,200 - 190\,W^w.$$

The main properties of firewood used for its classification are the kind of wood (hard or soft) and water content (dry wood with $W^w \leqslant 25\%$, half-dry with $W^w = 25\text{-}30\%$ and damp wood with $W^w > 35\%$).

Peat is the product of incomplete decomposition of plants at air deficiency and high humidity. Depending on the method of extraction, lump peat in the form of bricks and milled peat in the form of chips are distinguished. Peat has a high water content (up to 50%) and a high ash content. The heat of combustion of raw peat is from 8.3 to 10.5 MJ/kg.

Brown coal consists of combustible matter of plant origin and is the next stage of carbonization following the formation of peat. Brown coal also has high water and ash contents. The heat of

combustion of brown coal ranges from 6.2 to 18.5 MJ/kg. Peat and brown coal are locally utilized in the regions where they are extracted.

Depending on chemical composition and utilization, black coal can be divided into jet coal (J), gas coal (G), fat coal (F), lean coal (L), and others. The heat of combustion of coal Q_1^w ranges from 20.9 to 27.2 MJ/kg.

Anthracites are marked by letter A followed by a letter corresponding to the size of a lump: slab (AS), lump (AL), crushed (AC), seed (ASD), slack (ASK), etc. Anthracites which are not sorted according to the lump size are marked by letter S.

Liquid fuel is mainly obtained by petroleum processing. Kerosene, petrol, lubricating oil and other types of liquid fuel are obtained from petroleum. Kerosene and petrol are used as fuel for internal combustion engines. The residue of petroleum processing, viz. fuel oil, is utilized as a fuel in industrial furnaces and furnaces in steam boilers. The heat of combustion of fuel oil is $Q_1^w = 40$ MJ/kg.

Gaseous fuel is a mixture of different gases. Natural gas contains from 80 to 98% of methane. Casting-head gas appearing at the surface of production oil wells simultaneously with extracted petroleum is composed of methane (40 to 60%) and heavy hydrocarbons (ethane, propane, butane). The heat of combustion Q_1^w varies from 33.5 to 35.6 MJ/m^3 for natural gas and from 39.7 to 58.7 MJ/m^3 for casting-head gas.

The most widely used artificial gases are producer gas with Q_1^w from 5.9 to 10.5 MJ/m^3, coke-oven gas with $Q_1^w = 16.7$ MJ/m^3, and blast-furnace gas with $Q_1^w = 3.77$ MJ/m^3.

18.4. Combustion of Fuel

Combustion of fuel is a chemical process involving an intense liberation of heat when combustible components of a fuel combine with atmospheric oxygen.

Combustion processes are divided into homogeneous and heterogeneous ones. If a fuel and an oxidizer (oxygen) are in the gaseous state and form a homogeneous mixture, combustion takes place in the bulk and is called *homogeneous*. In *heterogeneous combustion*, a fuel and an oxidizer are in different phases and reactions occur at an interface (solid, liquid or gaseous). The process of burning fuel can be conditionally divided into two stages: ignition and subsequent combustion. The temperature of a fuel increases with heating. When a certain temperature (for a given fuel) is attained (ignition point), the fuel ignites, after which the process of steady-state burning sets in.

Combustion is called *complete* if it occurs with a sufficient amount of an oxidizer and terminates when combustible elements of the

fuel are fully oxidized. In this case, the combustion product contains CO_2, SO_2, water vapour H_2O and N_2. If the amount of oxidizer is insufficient, incomplete combustion takes place, and combustion product contains CO.

Air Rate. The theoretical amount of air required for combustion of a fuel is determined by formulas describing the combustion of individual elements of the fuel. For example, 32/12 = 8/3 = 2.67 kg of oxygen are required to burn 1 kg of carbon, since the reaction of carbon burning occurs as follows:

$$12 \text{ kg C} + 32 \text{ kg } O_2 = 44 \text{ kg } CO_2.$$

For burning 1 kg of hydrogen, 8 kg of oxygen are required:

$$4 \text{ kg } H_2 + 32 \text{ kg } O_2 = 36 \text{ kg } H_2O, \ (32/4 = 8);$$

for burning 1 kg of sulphur, 1 kg of oxygen:

$$32 \text{ kg S} + 32 \text{ kg } O_2 = 64 \text{ kg } SO_2.$$

Thus, the amount of oxygen (in kilograms) required for complete combustion of 1 kg of fuel is given by

$$8C^w/3\cdot 100 + 8H^w/100 + S_v^w/100 - O^w/100.$$

If we consider that the mass fraction of oxygen in air is 0.232, then the theoretically required amount of air for complete combustion of 1 kg of solid or liquid fuel under normal conditions (in kilograms of air per kilogram of fuel) is

$$L_t - (2.67C^w + 8H^w + S_v^w - O^w)/100\cdot 0.232.$$

Since the density of air $\rho = 1.293$ kg/m³ under normal conditions, the volumetric air rate V_t for burning 1 kg of a fuel is

$$V_t = L_t/1.293$$

or

$$V_t = 0.089C^w + 0.266H^w + 0.033 \ (S_v^w - O^w),$$

where C^w, H^w, S_v^w and O^w denote the elementary fuel composition in percent, as-received basis.

For a gaseous fuel, the theoretically required amount of air (m³) for burning 1 m³ of a dry gas is

$$V_t = 0.0478\,[0.5CO^t + 0.5H_2^t + 1.5H_2S^t + 2CH_4^t + \sum (m + n/4)\,C_mH_n^t - O_2^t],$$

where CO^t, H_2^t, etc. are the theoretical contents of different gases in a gaseous fuel in percent by volume.

The coefficients m and n in the expression $\Sigma\,(m + n/4)$ are assumed to be equal to the values of the subscripts of the gases for which these coefficients are used.

In actual practice, a fraction of atmospheric oxygen does not participate in chemical reactions. Therefore, for complete combustion of a fuel, a larger amount of air than required from theoretical consideration is supplied. The ratio of the actual amount of air (V_{ac}) supplied in the process of burning to the theoretically required amount (V_0) is called the *excess-air coefficient*:

$$\alpha = V_{ac}/V_0.$$

Under operation conditions, the excess-air coefficient can be approximately estimated in terms of the oxygen content in the combustion products of the fuel:

$$\alpha = 21/(21 - O_2).$$

Combustion Product Composition. It is conventionally assumed that the volume of products of combustion of a fuel (in m^3/kg) obey the following equation:

$$V_g = V_{dg} + V_{wv}, \tag{18.1}$$

where V_{dg} is the volume of dry gas and V_{wv} is the volume of water vapour.

The volume of dry gas is given by

$$V_{dg} = V_{RO_2} + V_{N_2} + V_{O_2},$$

where $RO_2 = CO_2 + SO_2$.

When $\alpha = 1$, the volume of dry gas has the minimum value, i.e. $V_{ac} = V_t$. If $\alpha > 1$, we have

$$V_{dg} = V_{dg}^{min} + (\alpha - 1) V_t,$$

$$V_{dg}^{min} = 0.79V_t + 0.0187K^w,$$

where $0.79V_t$ is the volume of nitrogen in the theoretically required amount of air and $0.0187K^w$ is the volume of triatomic gases:

$$K^w = C^w + 0.375S_v^w.$$

The volume of water vapour under normal conditions ($\rho = 0.805$ kg/m^3) is

$$V_{wv} = (9H^w + W^w)/100 \cdot 0.805$$

or

$$V_{wv} = 0.0124\ (9H^w + W^w).$$

The volume of combustion products of a gaseous fuel is determined from the same equation (18.1) as for the case of solid or liquid fuel. In this case,

$$V_{RO_2} = 0.01\ (CO_2 + CO + H_2S + CH_4 + 2C_2H_4).$$

When $\alpha = 1$, we obtain

$$V_{H_2O}^{min} = 0.01\,(H_2S + H_2 + 2CH_4 + 0.124d_g + C_2H_4) + 0.0161V_t,$$

where d_g is the moisture content of a gaseous fuel. When $\alpha > 1$, we have

$$V_{H_2O} = V_{H_2O}^{min} + 0.0161\,(\alpha - 1)\,V_t.$$

The volume of dry gas for $\alpha > 1$ is given by

$$V_{dg} = V_{dg}^{min} + (\alpha - 1)\,V_t,$$

$$V_{dg}^{min} = V_{RO_2} + V_{N_2}^{min},$$

$$V_{N_2}^{min} = 0.79V_t + N_2/100.$$

Taking into account the gas temperature t, we have the following expression for the gas volume under atmospheric pressure:

$$V_g^t = V_g\,(1 + t/273).$$

The composition of combustion products is determined with the help of gas analyzers.

Enthalpy of Combustion Products. The enthalpy of the products of fuel combustion is calculated by summing up the enthalpies of individual components of flue gases. Its value depends on the type of fuel (solid, liquid or gaseous). The enthalpy is measured in kJ/kg or kJ/m³ and is given by

$$I = \sum_i V_i C_i t_i.$$

The enthalpy of the theoretical volume of gases ($\alpha = 1$) at a temperature t_g is

$$I_g^0 = (V_{RO_2}^0 C_{RO_2} + V_{N_2}^0 C_{N_2} + V_{H_2O}^0 C_{H_2O})\,t_g.$$

The enthalpy of combustion products at $\alpha > 1$ is larger than I_g^0 (i.e. the value for $\alpha = 1$):

$$I_g = I_g^0 + (\alpha - 1)\,I_{air}^0 + I_{\Delta V_{H_2O}} + I_{ash},$$

where I_g^0 is the enthalpy of the theoretically required air:

$$I_{air}^0 = V_{air}^0 C_{air} t_g \text{ in kJ/kg or kJ/m}^3,$$

$I_{\Delta V_{H_2O}}$ is the enthalpy of the additional volume of water vapour:

$$I_{\Delta V_{H_2O}} = 0.0161\,(\alpha - 1)\,V_{air}^0 C_{H_2O} t_g \text{ in kJ/kg or kJ/m}^3,$$

I_{ash} is the enthalpy of ash:

$$I_{ash} = a_{en} A^w / 100 C_{ash} t_r \text{ kJ/kg},$$

where a_{en} is the fraction of fuel ash entrained by gases from the furnace, C_{RO_2}, C_{N_2}, C_{H_2O}, C_{air} and C_{ash} are the heat capacities of triatomic gases, nitrogen, water vapour, air, and ash at a temperature t_g. The value of $I_{\Delta V_{H_2O}}$ is small and can be neglected. The ash enthalpy I_{ash} is taken into account only when the reduced value of the entrained ash $a_{en}A^w > 6$.

Test Questions

1. List basic natural power resources.
2. What do we call fuel?
3. What is the elementary composition of solid fuel?
4. Name the basic elements constituting the working mass of fuel.
5. What does the ballast of fuel include?
6. How can one fuel mass be converted to another?
7. What is the heat of combustion of a fuel?
8. How is the heat of combustion of a fuel determined in experiments and theoretically?
9. What is the difference between the high and low heat values?
10. How are natural fuel rates converted to fuel equivalent?
11. What is meant by burning of fuel?
12. How can we calculate the theoretical amount of air required for complete combustion of a fuel?
13. What does the excess-air coefficient show?
14. How is the enthalpy of a combustion product determined?

Chapter Nineteen

BOILER INSTALLATIONS

19.1. Basic Elements and Classification

Boiler plants are used for transforming the chemical energy of fuel into heat. The heat energy is supplied from a boiler to the user with the help of heat-transfer agents. Hot water and steam are employed for this purpose.

A *boiler plant* is a system of installations intended for generation of steam or hot water. Figure 35 shows a boiler plant for steam generation. Fuel is burnt in furnace *1*. The combustion products thus obtained are at a high temperature and pass over the heating surface of a steam generator. As a result, the water in the steam generator gets heated, starts boiling and is converted into steam which then passes through superheater *3* and is heated to a temperature exceeding

the saturation temperature corresponding to the pressure in the steam generator. After passing through the gas duct with the steam superheater, the combustion products enter economizer gas duct *4* and air preheater *5*. The economizer and the air preheater have bare tube surfaces to cool the combustion products. The feed water is pumped through the economizer tubes and is supplied to boiler drum *2*. Before

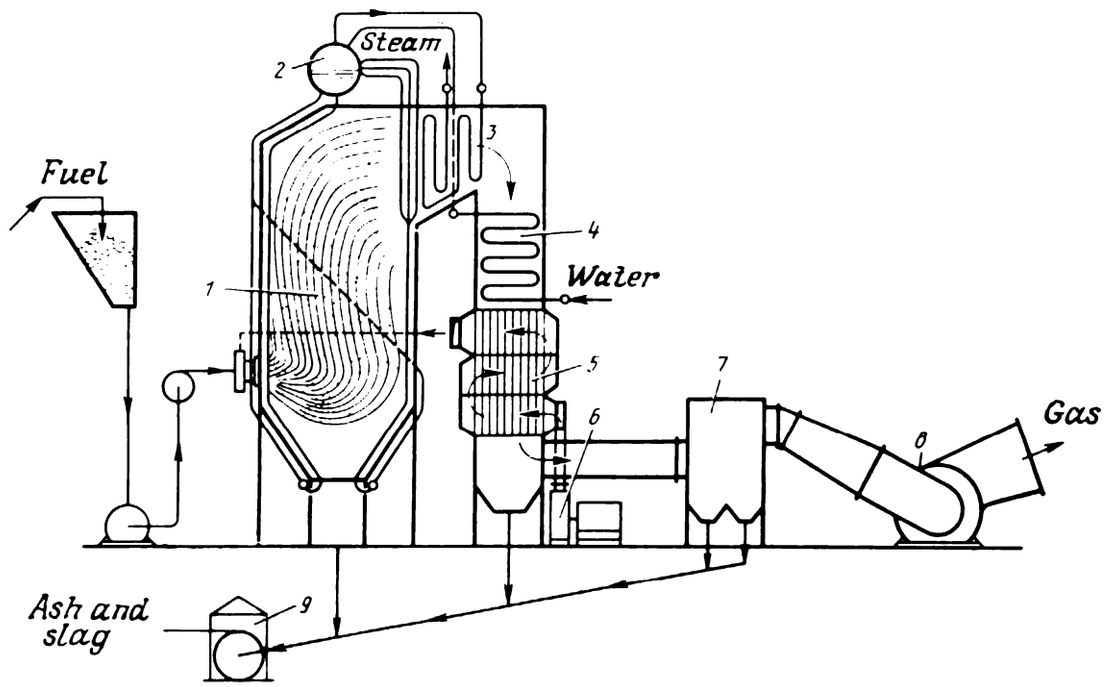

Fig. 35. Boiler plant for steam generation.

entering the furnace, air passes through the preheater. The furnace, steam generator, superheater, economizer and air preheater are the basic elements of a boiler installation.

In addition to the basic elements mentioned above, a boiler plant also contains the following auxiliary units: smoke exhauster *8* and chimneys for the removal of combustion products; blast fan *6* for blowing air into the furnace, feed pumps for supplying water to the boiler, a fuel-supply unit, gas-purifying unit *7* and ash-disposal unit *9*, pipe lines for various purposes, etc. The necessity of using each element of the installation depends on the purpose and power of the boiler plant, as well as on the type of fuel and the combustion method.

In hot-water boilers, water is heated to temperatures of 95-150 °C under pressures which preclude the boiling of water. A hot-water boiler consists of a furnace and auxiliary installations for water supply and for removal of the combustion products.

Depending on the purpose for which they are used, boiler plants may be called power, industrial, heating, or mixed composite boiler plants. Power-generating boiler units are equipped with large steam generators operating at moderate and high pressures and are

intended for supplying steam to turbines at power plants and steam-and-air turbine power stations. As a rule, the power boiler units form a vital part of the modern technology of generating electric power. Industrial boilers are installed in industrial areas, towns, or at individual factories. They are equipped with steam generators operating at low (or moderate) pressures and are intended for supplying steam to heat and power consumers. The commercial and technological units are the main consumers of steam generated in this way.

The heating boilers serve residential areas and are equipped with steam generators or water-heating units. These plants cater to the heat requirements for domestic heating, ventilation systems and hot water supply.

Composite boiler plants may be equipped with steam generators (for meeting the industrial requirements of the area) as well as water heating units (for catering to the needs of domestic heating, ventilation and hot water supply). Such units envisage a mutual change-over to stand-by facility (the possibility of meeting the domestic requirements with the help of steam-water heat exchangers).

19.2. Boiler Units

A *boiler unit* is an assembly of the basic elements of boiler installations. Steam (steam-generating) and water-heating units are the main types of such systems.

Steam generators for power plants, industrial boilers and steam-heating boilers are made of steel. The hot-water boilers of moderate heating capacity can be made of pig iron.

As a rule, steam generators in thermal power plants are units of moderate to high power (75-2650 t/hr). The single-unit power of steam generators in industrial boilers does not exceed 150 t/hr, although the overall steam-generating capacity of some units may reach several hundred tons per hour. The power of heating boilers is determined by the peculiarities of the district consuming the heat, the type of fuel used, economic expedience of heat supplied to remote areas, etc. The single-unit power of pig iron heating boilers varies from tens of kilowatts (1 kW = 860 kcal/hr) to 1500 kW. The single-unit heat generating capacity of steel water-heating boilers attains values up to 116.3×10^3 kW. The peak power of water heating boilers is 210×10^3 kW.

19.3. Furnaces

Depending on the method of combustion, furnaces may be classified as layer furnaces, chamber furnaces, swirling-type furnaces or hybrid furnaces. In layer furnaces (Fig. 36*a*), fuel is burnt on a fire grate

in a mobile or fixed layer. Furnaces in which the fuel supply to the furnace, displacement of the fuel and the disposal of cinder and ash are mechanized are called mechanical stokers. Furnaces in which only one or two operations are mechanized are called semimechanical stokers. In chamber (torch) furnaces (Fig. 36*b*) the fuel is burnt in suspension. Before combustion, the solid fuel being supplied to a chamber furnace is ground. Solid fuels which have a large output of volatile products and are easy to grind (for example, peat) may be used in torch-layer furnaces. In this case, the fine fuel is burnt in suspension, and the coarser part in a layer.

In swirling-type furnaces (Fig. 36*c*), the fuel is burnt in a swirling flow of air and fuel particles. A very high intensity of swirling

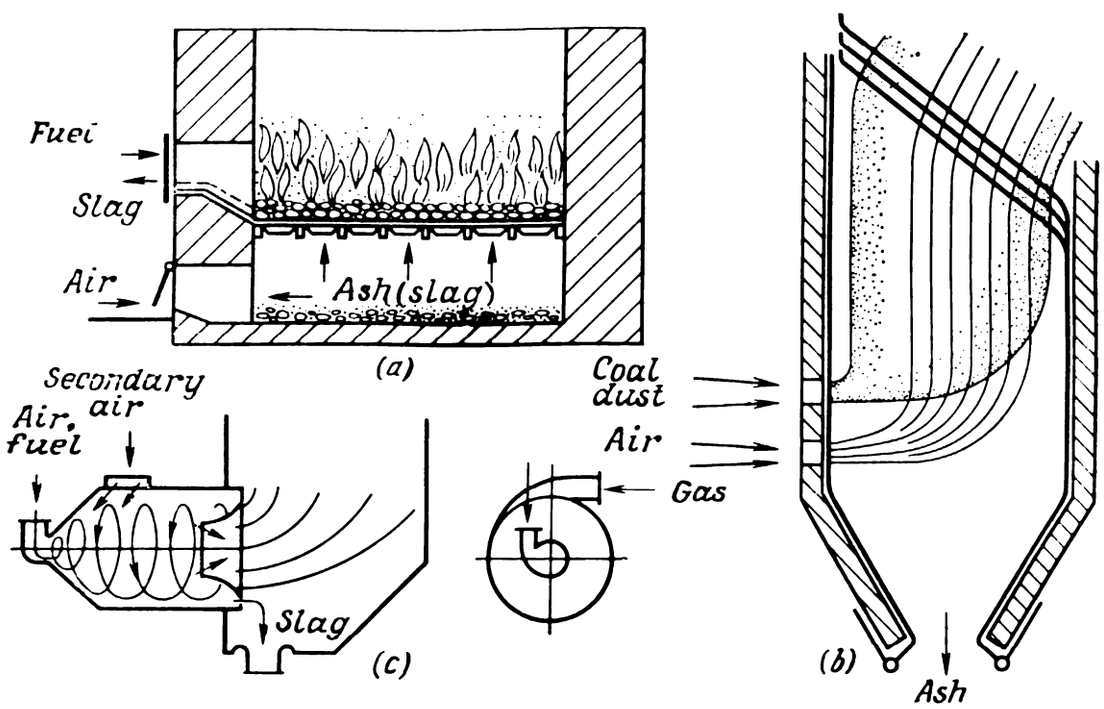

Fig. 36. Furnaces:
(*a*) layer furnace, (*b*) chamber furnace, (*c*) swirling-type furnace.

flow facilitates the combustion of coarse coaldust and crushed peat, thus considerably reducing the power consumption on fuel grinding. The application of cyclone furnaces served as the logical culmination of the development of swirling-type fuel combustion.

The effectiveness with which fuel is consumed in a furnace depends to a large extent on the type of the furnace and its construction.

Layer Furnaces. Stationary Fuel Layer Furnaces. In stationary layer furnaces, a solid fuel is burnt under manual loading operation, poking and cinder removal. The grating of such a furnace (Fig. 37) is a firing-floor beam or is of bed plate type (Fig. 38) with stiffening ribs of thickness d and holes with a clearance s for letting in air.

The combustion of the fuel in the furnace (see Fig. 37) is accompanied by the supply of fuel to the burning layer, thus ensuring

a rapid ignition and a stable combustion. The duration of stay of the fuel on the grid is unlimited, and hence a more complete combustion of the fuel can take place. Besides, large supplies of fuel on the grating permit a stable operation of the furnace by alternating loading and regulation of the combustion intensity by varying the amount of air being let into the furnace. The depth of the grating relative to the lower edge of the loading window (furnace door), denoted by H, depends on the type of fuel being used. In the furnace for burning anthracite, H = 215 mm, while for high-ash coal H = 500-600 mm. The grating is inclined to the horizontal at an angle of 3-6.5°.

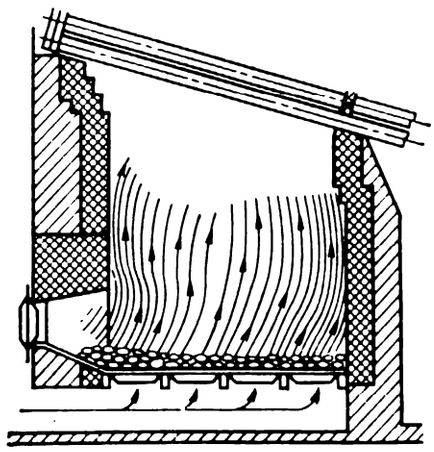

Fig. 37. Manually operated layer furnace.

Manually operated furnaces have quite serious drawbacks: loading of the fuel, poking of the hot layer and removal of cinder and ash are carried out manually, the thermal power of such furnaces is not

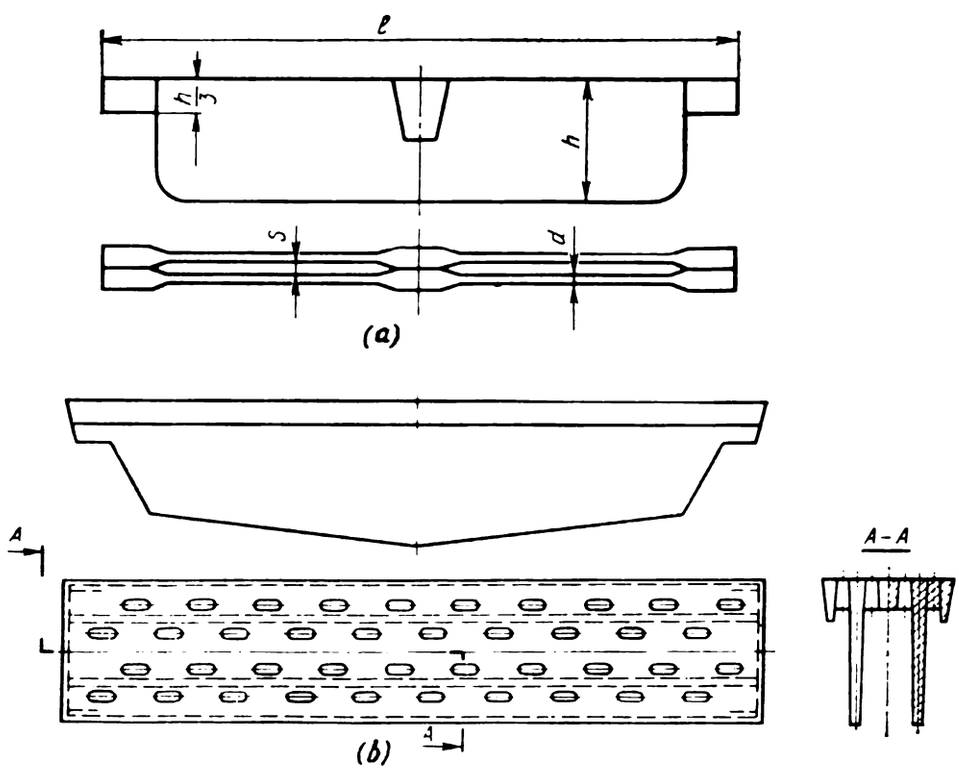

Fig. 38. Furnace grating:
(a) firing-floor beam; (b) bed-plate type.

very high, the operation has to be carried out periodically, and the efficiency of such furnaces is low. Manually operated furnaces can be used only in low-rating boiler units.

Semimechanical Stokers. In such furnaces, fuel is supplied with the help of special spreaders, or is delivered into the furnace under its own weight as the existing fuel in the furnace gets burnt. The spreaders are located above the loading clearances. The fuel is delivered into the furnace by rotating (Fig. 39*a*) or mechanical (Fig. 39*b*) spreaders. When air-jet spreaders are used (Fig. 39*c*), the fuel from

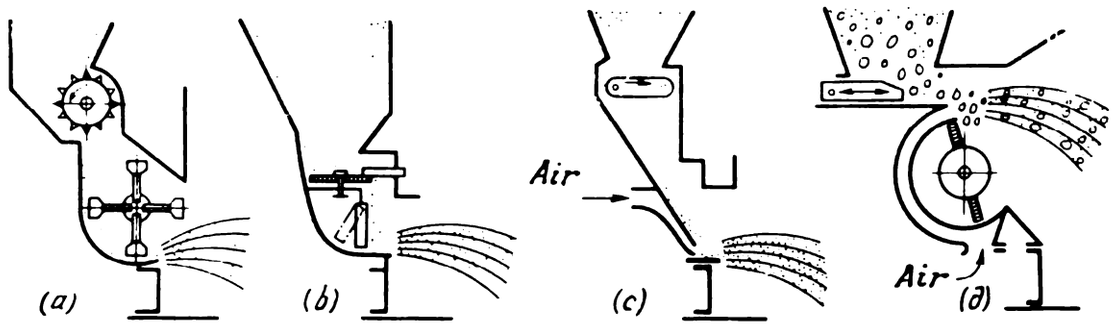

Fig. 39. Furnace spreaders:
(*a*) rotating; (*b*) mechanical; (*c*) air-jet; (*d*) pneumatic rotary.

the unloading plate passes to the spreader plate from where it is blown with the air to the grid. In pneumatic rotary spreader (Fig. 39*d*), mechanical spreading is combined with air-jet spreading.

The fire grating in semimechanical furnaces is made either from jigging grates or in the form of a travelling grate stoker. Mechaniza-

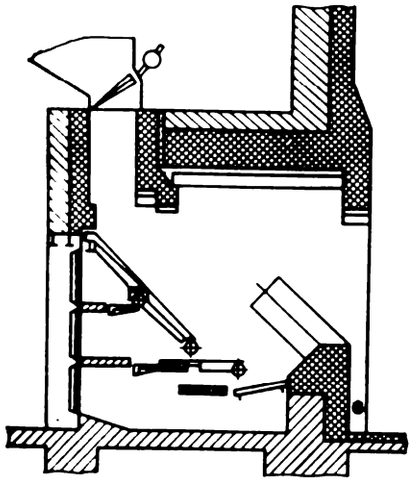

Fig. 40. Shaft-type furnace.

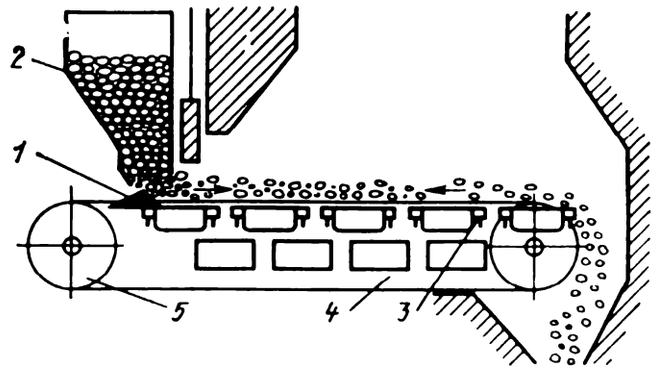

Fig. 41. Furnace with poking planks.

tion of fuel supply and removal of cinder from the grate reduces the manual labour involved and increases the efficiency of the furnace.

Shaft-type furnaces (Fig. 40) are employed for the combustion of damp fuel having a high yield of volatile. In such a furnace, fuel is transported over the grate under the action of gravity. As the fuel slides down an inclined grate, heating, drying and ignition of

the fuel take place successively. The final combustion occurs on horizontal grates.

Mechanical Stokers. Mechanical stokers include furnaces with poking planks and travelling grate stokers. In furnaces with poking planks (Fig. 41), the main mechanization element in the furnace is poking plank *1* with a sharp bevel in front and a flat bevel at the

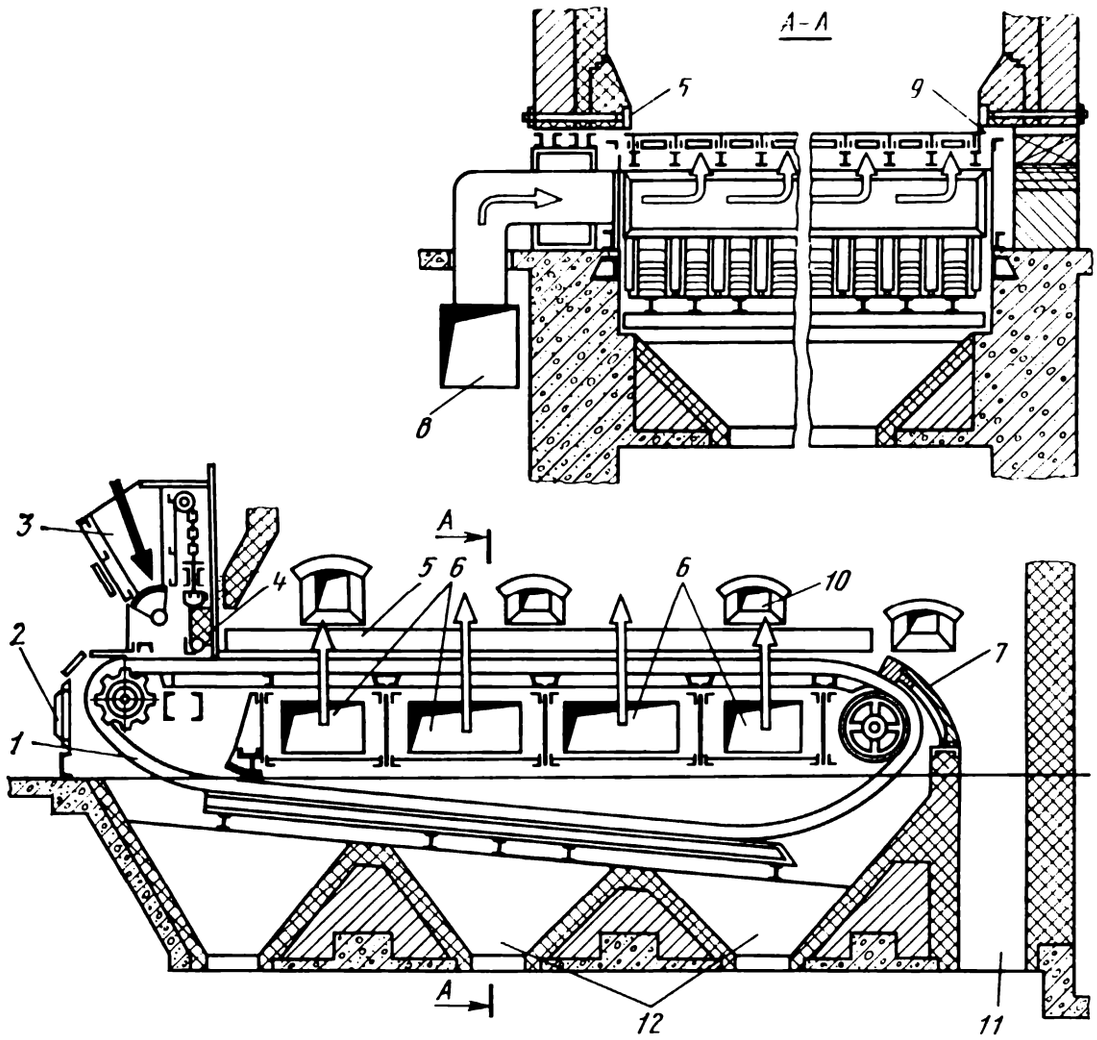

Fig. 42. Travelling grate stoker:
1—undercarriage (grating); *2*—cast-iron front; *3*—fuel bunker; *4*—layer thickness regulator; *5*—cooling panel; *6*—blast zones; *7*—slag-remover; *8*—hot air duct; *9*—packing; *10*—poking windows; *11*—slag hopper; *12*—disposal hopper.

rear. The plank moves along a flat stationary grate *3*. In its forward motion, the plank pushes the fuel from under loading bunker *2* into the furnace and removes cinder and ash from the grate. In its reverse motion, the plank pokes the fuel layer. The plank is set into motion with the help of an endless chain *4* connected to an electric motor with reduction gear *5*. The poking plank is activated with the help of a special semiautomatic device. A pushbutton control is employed for moving the plank.

Travelling Shutter Grate Stokers. For average power boiler units involving fuel combustion in a layer, travelling shutter grates equipped with a grid without an ashpit are employed (Fig. 42). Grating *1*

is made of grates specially constructed to prevent ashpit losses and rests on roller driving chains which are mounted at the front on driving star wheels and at the back on smooth supporting pulleys. The star wheels are set into motion by an electric motor with the help of a reduction gear. The speed of the moving grate can be varied from 2 to 30 m/s. Fuel dropping from bunker *3* is transported to the furnace by the travelling shutter grate. The burnt fuel is thrown into slag hopper *11* with the help of slag-remover *7*. Air for fuel combustion is supplied from below the grating and is distributed in different zones according to the process taking place there (drying and sublimation, ignition and combustion). The fuel layer on the grating is controlled by regulating door *4* at the front of the grating where the fuel drops out of bunker *3*. A stable ignition and complete combustion of the fuel are ensured with the help of specially constructed furnace roofs at the front and rear over the grating.

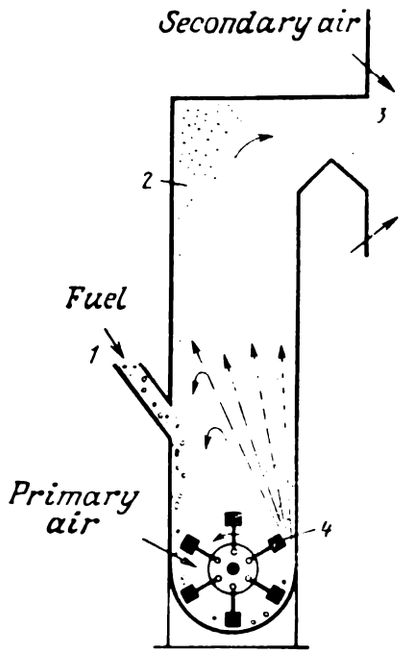

Fig. 43. Air-swept direct-fired pulverizer.

Chamber Furnaces. Chamber furnaces are intended for burning fuel in suspension. Any type of fuel—solid, liquid or gaseous—can be used in these furnaces. Before combustion, the fuel (solid) is crushed and pulverized. The extent of crushing and the fineness of the powder depend on the type of fuel and the construction of the furnace.

Air-swept direct-fired pulverizers are used for preparing dust from high-volatile coal, which can be easily subjected to pulverization (Fig. 43). Fuel from bunker *1* containing damp coal is delivered into shaft *2* and falls on hammers *4* which rotate at a high speed and crush it.

Together with the fuel, hot air or a gas-air mixture is introduced into the lower part of the shaft. The pulverized fuel is dried and delivered from the shaft to furnace chamber *3* (air flow velocity in the shaft: 1.5-3.5 m/s).

A finer powder has to be used for burning pulverized fuel containing a low fraction of volatile. Ball-tube mills (Fig. 44) are used for preparing fine dust. Such a mill consists of a cylindrical drum of length 2.5 to 8 m and diameter 2 to 4 m. The drum is filled with steel balls of diameter 30-40 mm and is rotated at the rate of 16-25 rpm. Fuel and hot air are supplied to the drum. As the drum

rotates, fuel is crushed into powder, dried and removed from the mill with an air blast.

The pulverizer system may be individual (Fig. 45), when the powder from mill *1* passes through separator *2* and is blown into

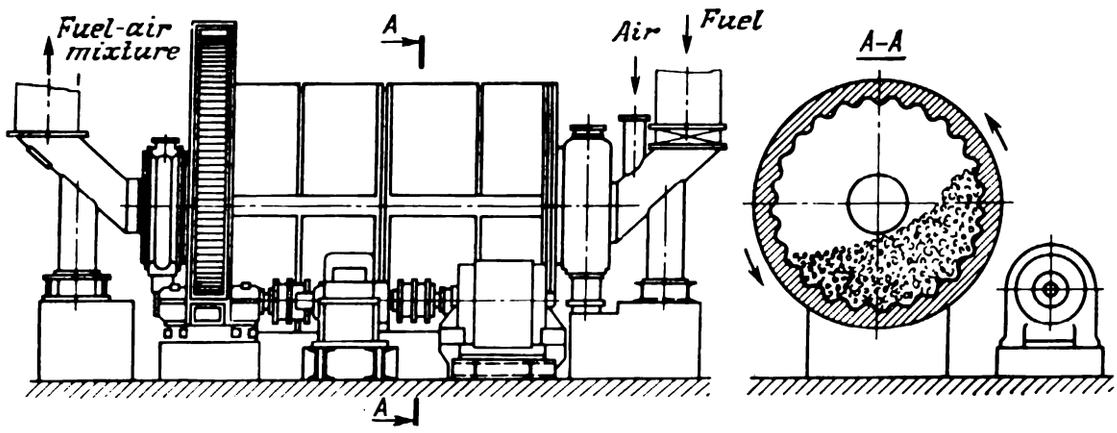

Fig. 44. Ball-tube mill.

furnace *4* with the help of fan *3*, or with an intermediate bunker (Fig. 46), when powder from mill *1* passes through separator *2* and is delivered to an intermediate bunker *3*. The presence of the intermediate bunker helps to reduce the power consumption for operating the mill, since the load of the mill does not depend on the load of

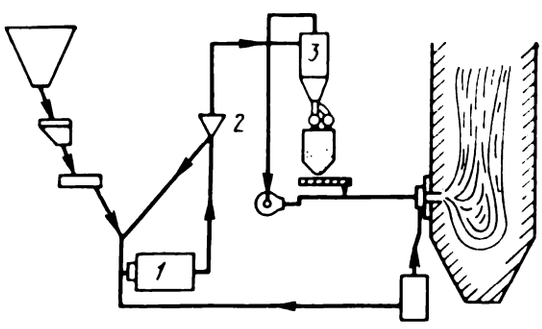

Fig. 45. Individual pulverization system.

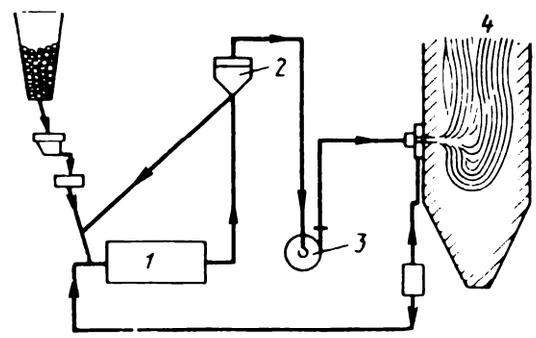

Fig. 46. Mill with an intermediate bunker.

the furnace. During load shedding, crushed fuel is stored in the intermediate bunker. Pulverizer systems with intermediate bunkers are more reliable than individual pulverizers. A mixture of coaldust and air is delivered through a burner into the furnace. The air used for blowing the crushed fuel into the furnace is called *primary air*, while the additional air supplied into the furnace through burners or nozzles for fuel combustion is called *secondary air*.

Rectangular fantail burners and circular burners with tapered dissectors are the ones most frequently used for combustion of fuel in torch furnaces. In a circular burner with a tapered dissector (Fig. 47), pulverized fuel and primary air are supplied to central

pipe *2* with pig iron tip *6*. At the end of the pipe, the mixture of fuel and air flows past dissector *5* whose position in the pipe is regulated with the help of control wheel *1*. Secondary air introduced into the

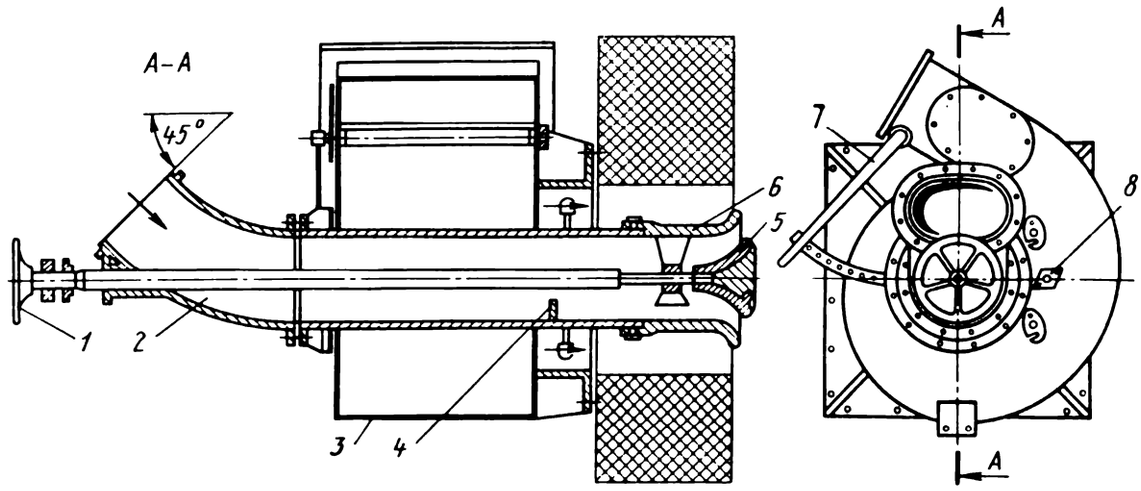

Fig. 47. Circular burner with a tapered dissector:
1—control wheel; *2*—central pipe; *3*—volute chamber; *4*—baffle; *5*—dissector; *6*—pig-iron tip; *7*—handle; *8*—hole for fuel nozzle.

furnace through volute chamber *3* gets mixed with the air-fuel mixture reflected by the dissector. Further control over the operation of the burners is exercised through a tongue slide valve with the help

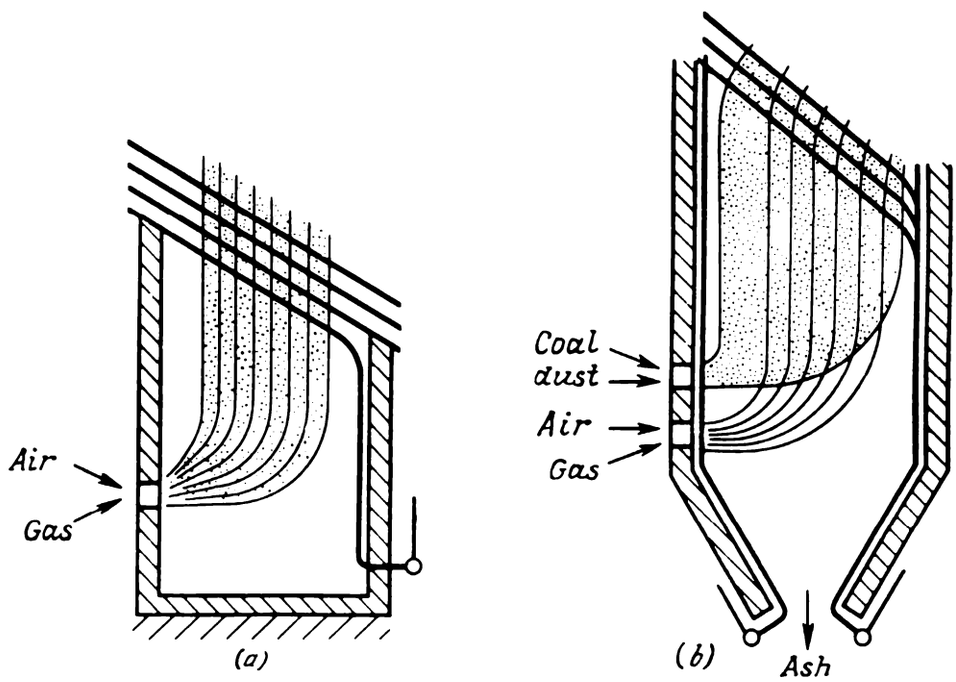

Fig. 48. Chamber furnace:
(*a*) for burning gas or gas-oil mixture; (*b*) for burning gas and coaldust.

of handle *7*. The firing of the furnace (and ignition of the coaldust torch) is carried out by a fuel nozzle placed in hole *8*. The design of chamber furnaces employing gaseous or liquid fuel is simpler than that of furnaces using pulverized fuel (Fig. 48). Liquid fuel is admitted into the furnace through air- or steam-atomizer burners.

In mechanical atomizing burners, fuel under a pressure of 2-3 MPa is forced through the holes of an atomizing nozzle. Mechanical atomizing burners are compact but sensitive to deviations from the ideal operating conditions as well as to various fuel contaminations. The steam atomizer burners are more reliable, but consume a part of the steam generated by the boiler. Fuel nozzles are installed at the front or side walls of the furnace whose depth must not be

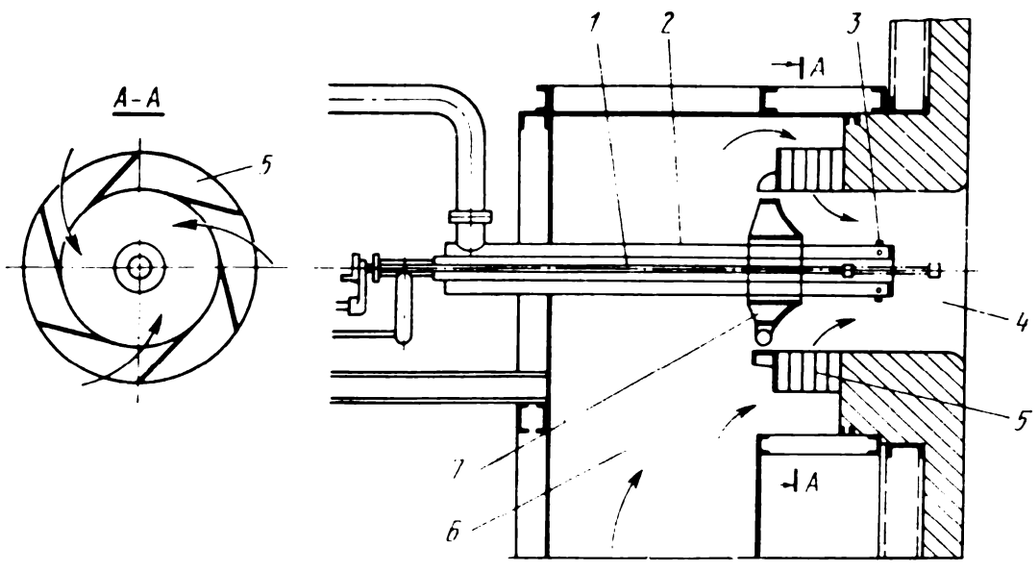

Fig. 49. Oil-gas burner:
1—fuel nozzle ("OFF" position); the dashed line shows the operating position of the tip; *2*—pipe for supplying natural gas; *3*—outlets for natural gas; *4*—porthole (flare) for burner; *5*—air swirler (register); *6*—air duct; *7*—baffle plate.

less than 3-4 m. Air is forced into the furnace at the rate of 25-30 m/s through special registers placed near the nozzle flares. In low-capacity boilers, air atomizing burners are employed at an air pressure of 2-7 kPa. Such burners do not ensure a proper atomizing of the fuel.

Steam-jet mechanical atomizers and rotating atomizers are widely used at present. Injection-type burners or mixing burners (with internal and external mixing) are used for igniting the gas.

In high-power boiler units, fuel is ignited in furnaces intended for burning gas-fuel oil mixture or gas-coaldust mixture. Oil-gas burners (Fig. 49) or pulverized coal-gas burners of hybrid type are used in such furnaces.

Cyclone Furnaces. In cyclone furnaces (or burners), fuel is ignited in an artificially created eddy flow (Fig. 50). Crushed fuel (or dust) is supplied along with primary air to the central part of the furnace through a volute chamber. Secondary air is supplied through a nozzle slot into the furnace at velocities exceeding 100 m/s. The flow of air-fuel dust mixture is swirled and as a result, the fuel is thrown

towards the chamber walls. The temperature in the cyclone chamber attains values between 700 and 1800°C.

Cyclone furnaces (burners) may be horizontal, vertical or inclined. The eddy firing ensures a proper mixing of the fuel and air, a stable combustion and high heat-release rate in the volume of the furnace,

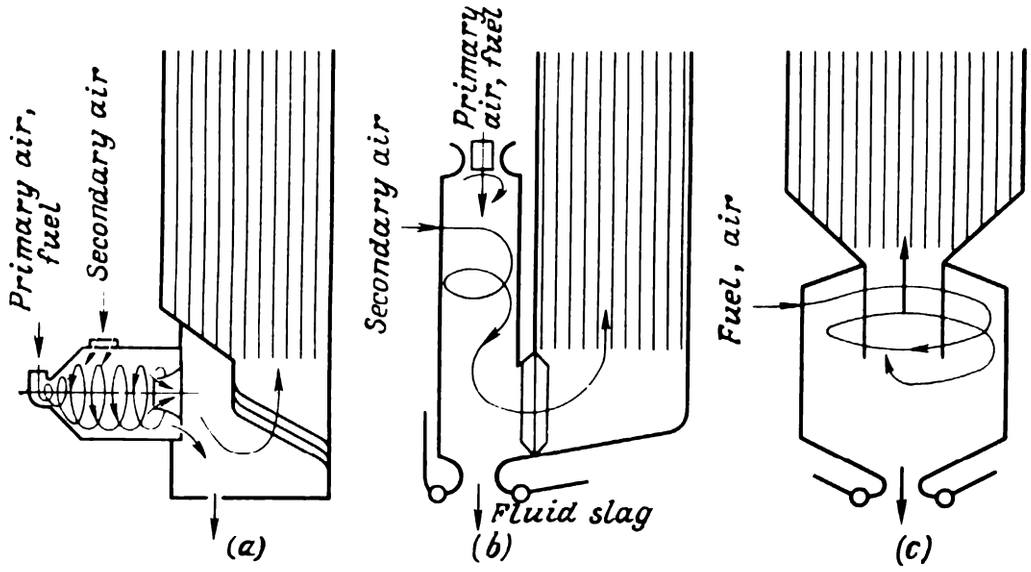

Fig. 50. Cyclone furnaces:
(*a*) horizontal; (*b*) vertical with gas removal at the bottom; (*c*) vertical with a swirling gas removal.

thus reducing the size of the furnace and heat losses due to incomplete combustion (chemical or mechanical in nature), simplifies the design and makes the system of pulverization and ash disposal

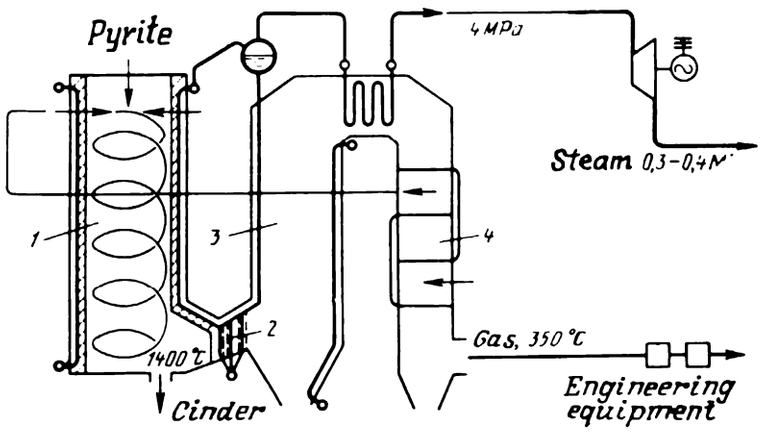

Fig. 51. Roasting plant with a cyclone chamber:
1—cyclone chamber; *2*—slag separator; *3*—slag granulator; *4*—air preheater.

more economical. Between 85 and 90% of the dust is utilized in the chamber in cyclone furnaces. Cinder can be removed in solid or liquid phase. Cyclonic principle of combustion is also applied in processes like roasting of pyrite ore (Fig. 51), preparation of defluorinated phosphate melts, etc.

Through slag-separator *2*, pyrite combustion products from cyclone chamber *1* arrive at slag-granulator *3* and pass through air preheater *4*. The roasting gas is then directed to technological apparatus.

Screens. In modern boiler units, temperature in the furnaces attains such levels that it becomes necessary to shield the lining of the furnace walls from the action of the torch. Such a shielding is ensured by placing furnace screens on the inner walls of the furnace. The screens are made of pipes which are mounted on the inner side of the lining. The pipes are included in the steam-and-water circuit of the furnace (Fig. 52) and at the same time serve as an additional heating surface thus increasing the steam-generating capacity of the boiler. Steam-generating heating surfaces serve as screens in boilers operating at moderate pressures, while in high-pressure boilers radiative steam superheaters and radiative economizers are used for this purpose.

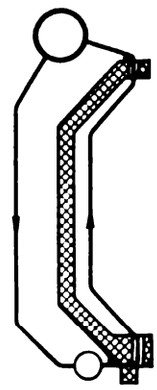

Fig. 52. Diagram showing the connection of water walls.

Thermal characteristic of the operation of furnaces is the apparent heat-release rate per unit volume of the furnace

$$q_V = BQ_l^w/V_f,$$

where Q_l^w is the low heat value of the fuel, B the fuel flow rate and V_f the volume of the furnace chamber.

When fuel is burnt on layer gratings, the heat-release rate per unit firebed surface is defined as

$$q_R = BQ_l^w/R_f,$$

where R_f is the firebed surface area of the grating.

The efficiency of the utilization of fuel heat in the furnace is estimated through the efficiency of the furnace

$$\eta_f = 100 - q_3 - q_4 - q_5^f - q_6,$$

where q_3, q_4, q_5^f and q_6 represent the heat losses corresponding to unburnt carbon and incomplete combustion, losses from the furnace alone to the surrounding medium and losses due to the heat of cinder respectively.

19.4. Steam Generators

Cylindrical steam generators (Fig. 53) are simplest in design. Further development in the steam generator design was carried out with a view to increase the heating surface. An increase in the inner heating

surface area led to the creation of gas-tube boilers in which gases circulate through flame and smoke tubes in the drum. Water-tube boilers came into existence as a result of an increase in the heating surface by attaching water-filled tubes to the drum. These steam-generating tubes are placed outside the drum and are heated by gases. In horizontal water-tube boilers, steam-generating tubes are inclined to the horizontal plane by not more than 40°. Vertical water-tube boilers may have several drums. In a single-drum boiler, all drums but one are replaced by collectors. The removal of heat

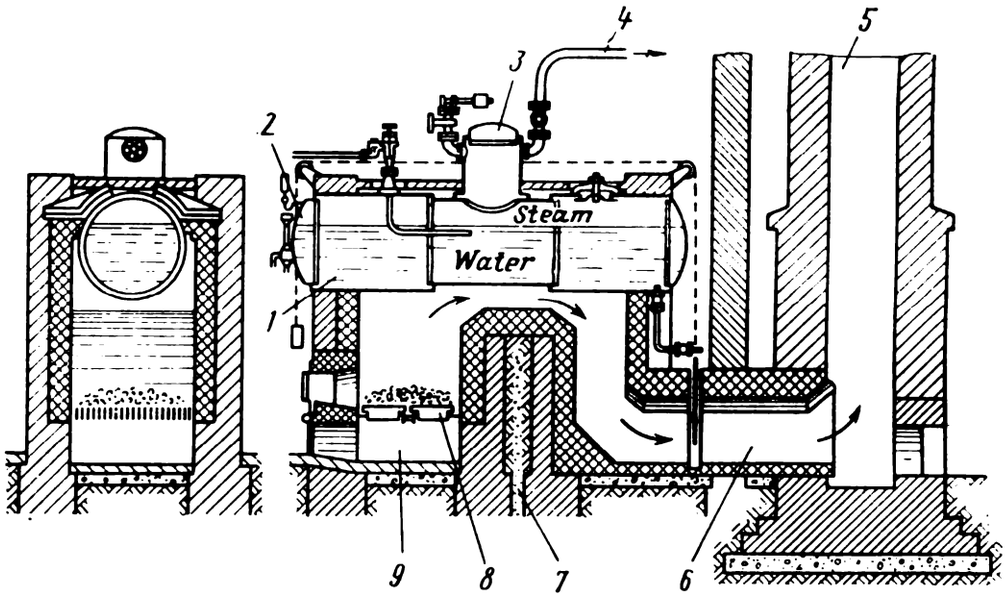

Fig. 53. Cylindrical steam generator:
1—drum; *2*—bottom; *3*—boiler-steam dome; *4*—steam removal; *5*—chimney; *6*—gas duct; *7*—baffle; *8*—fire grate; *9*—ash dump.

from the inner surface of steam-generating tubes is carried out by heating (and subsequent vaporization) of the water filling the tubes. The water in the tubes is continuously moving either due to a difference in densities of water in downcomers (which are outside the furnace) and hoisting tubes (which are in the furnace), or on account of a head produced by a pump. In the first case, the boilers are called *natural-circulation boilers* (Fig. 54*a*), while in the second case they are called *forced-circulation boilers* (Fig. 54*b*). Boilers in which water passes several times through the steam-generating circuit are called *multiple circulation boilers*. Boilers in which water is heated and converted into steam in a single passage during which water is supplied under pressure at one end and steam is discharged at the other end are called *straight-through boilers* (Fig. 54*c*).

Steam Generators in Heating and Industrial Boilers. In heating and industrial boilers, vertical cylindrical and vertical water-tube steam generators are employed. The boiler designed by V.G. Shukhov (Fig. 55) employes a vertical cylindrical type steam generator.

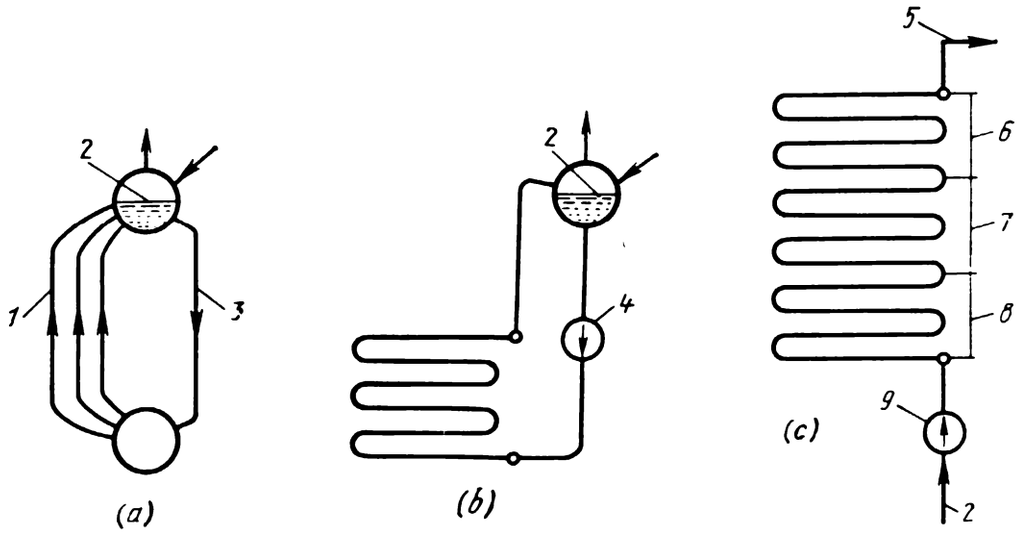

Fig. 54. Circulation of water and steam-water mixture in boilers:
(*a*) natural circulation; (*b*) multiple forced circulation; (*c*) straight-through motion; *1*—hoisting pipes; *2*—feed water; *3*—downcomers; *4*—circulation pump; *5*—superheated steam; *6*—superheating zone; *7*—evaporation zone; *8*—preheating zone.

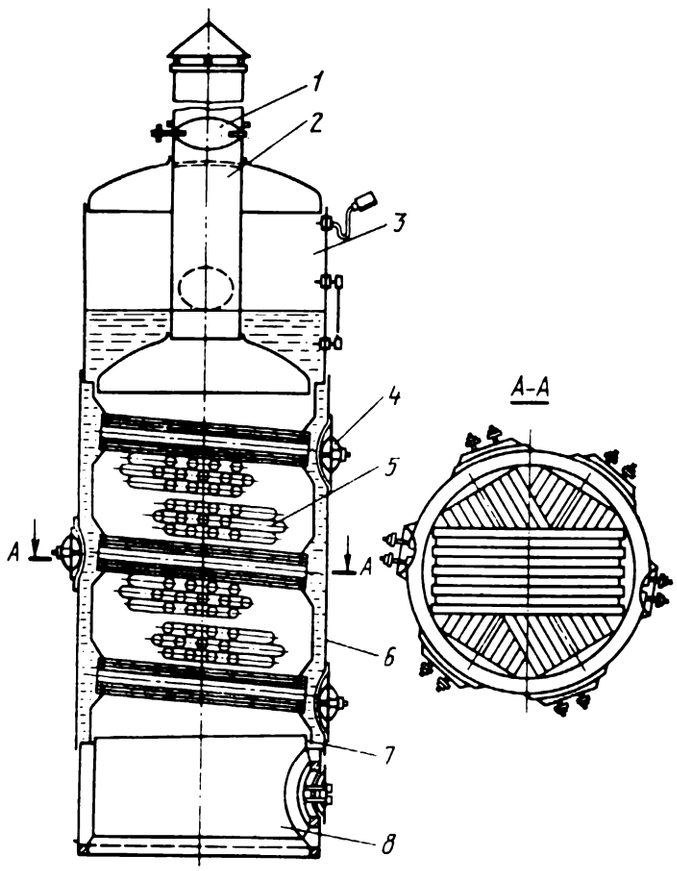

Fig. 55. Shukhov's vertical boiler:
1—smoke suppressor; *2*—chimney; *3*—steam space; *4*—peep holes; *5*—steam-generating tubes; *6*, *7*—coaxial cylinders; *8*—furnace.

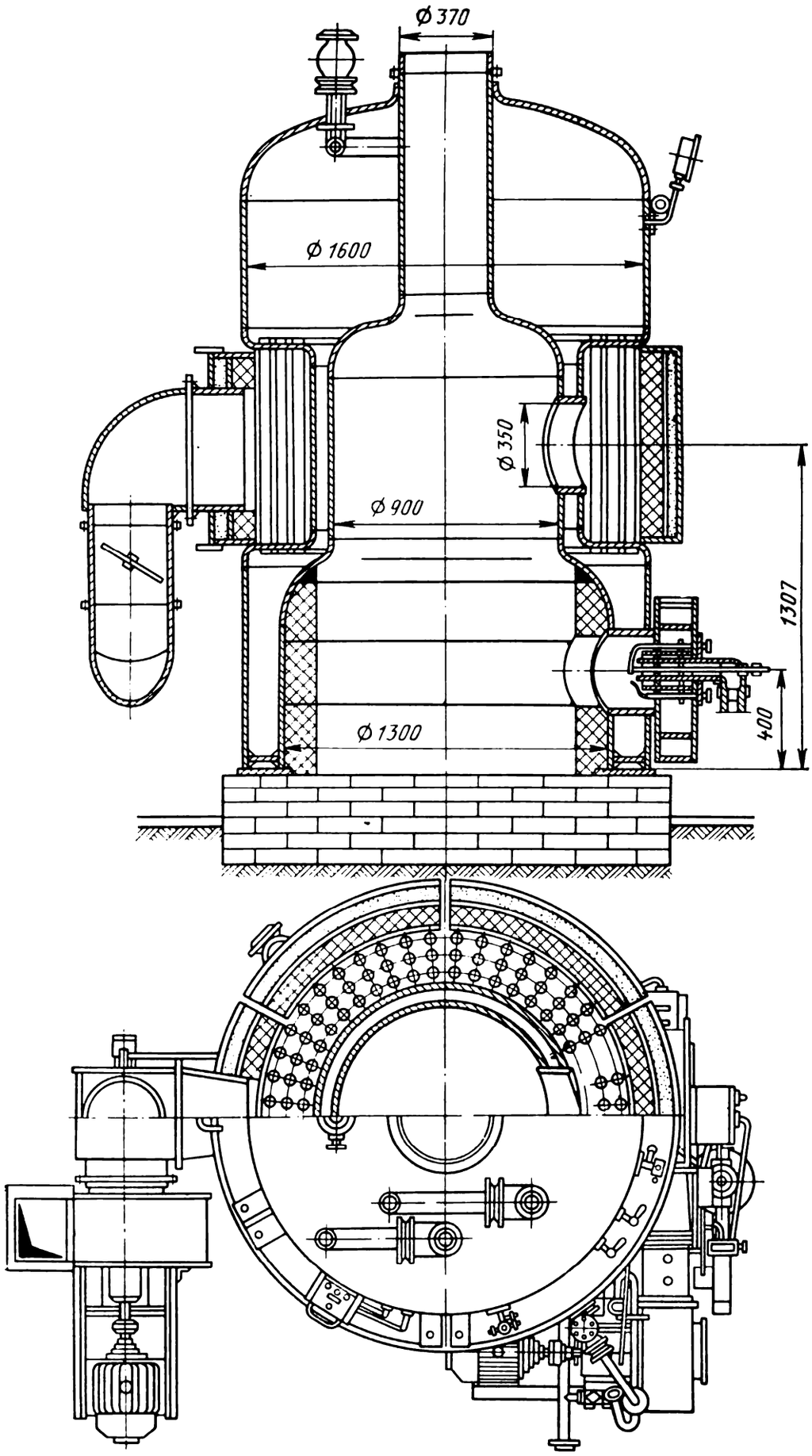

Fig. 56. МЗК steam generator.

This boiler consists of two coaxial cylinders *6* and *7*. The inner cylinder contains furnace *8* over which steam-generating tube bundles 5 are roll forged into the walls of the inner cylinder. The space between the cylinders is filled with water, and so are the steam-generating tubes. The space *3* above the water level is occupied by steam. The combustion products rise upwards from the furnace, pass between the steam-generating tubes and are released into the atmosphere

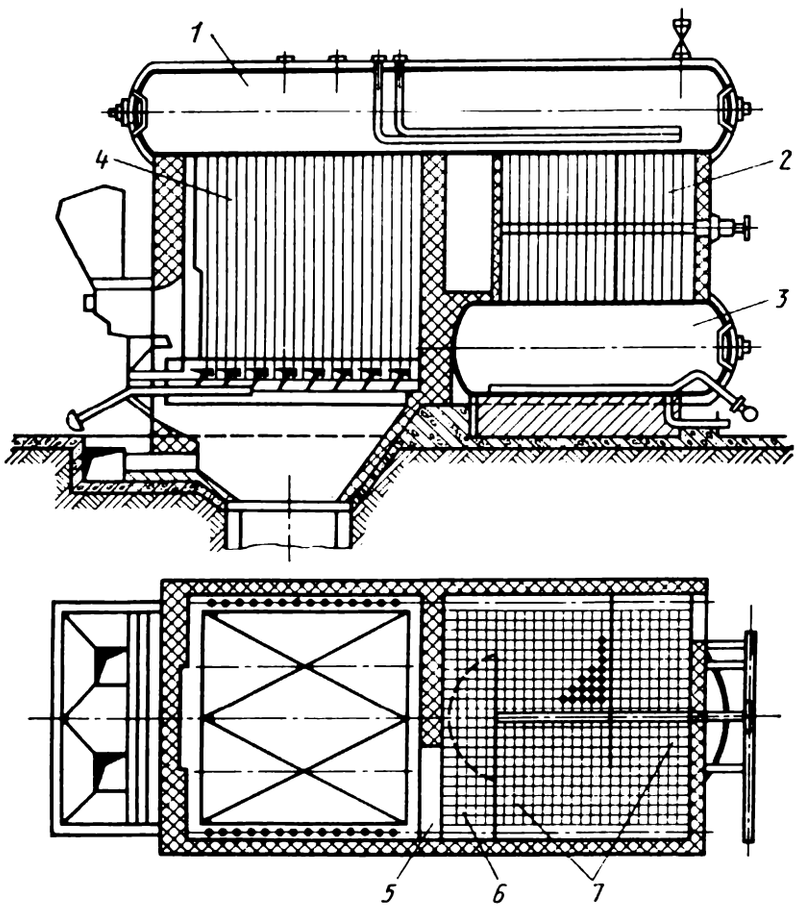

Fig. 57. ДКВ steam generator:
1—upper drum; *2*—steam tubes; *3*—lower drum; *4*—furnace; *5*—window; *6*—secondary combustion chamber; *7*—gas ducts.

through chimney *2* via smoke suppressor *1* in the outer cylinder. Peep-holes *4* are located against the lateral edges of the steam-generating tubes. Shukhov's boilers have a heating surface of 10, 16.5, 25 or 35 m^2 and can produce up to 25 kg of steam at a pressure of 0.8 MPa per square metre of the heating surface. Steam generators of ММЗ, ТМЗ and ВГД* type are similar in design and generate nearly the same amount of steam (up to 1 t/hr). One of the latest models of small-size boilers is МЗК steam-generator (Fig. 56).

Vertical Water-tube Steam Generators. The steam-generating capacity of vertical water-tube generators operating at low pressures (1.3 MPa) is higher than cylindrical steam generators. Boilers of ДКВ type (Fig. 57) are the ones most widely used. Modified ДКВР

* Soviet trade marks are used throughout the book.

steam generators have smaller upper drums. The steam generator consists of drums *1* (upper) and *3* (lower) connected by steam-generating tubes *2*, and furnace *4*. Such boilers can be designed without steam superheaters or with a superheater in the first gas duct. The combustion products pass from the furnace to combustion chamber *6* through window *5*, and then go on to gas ducts *7*. ДКВР steam generators have a natural water circulation. Water from the upper drum is delivered to the lower one through the downcomers and the screen

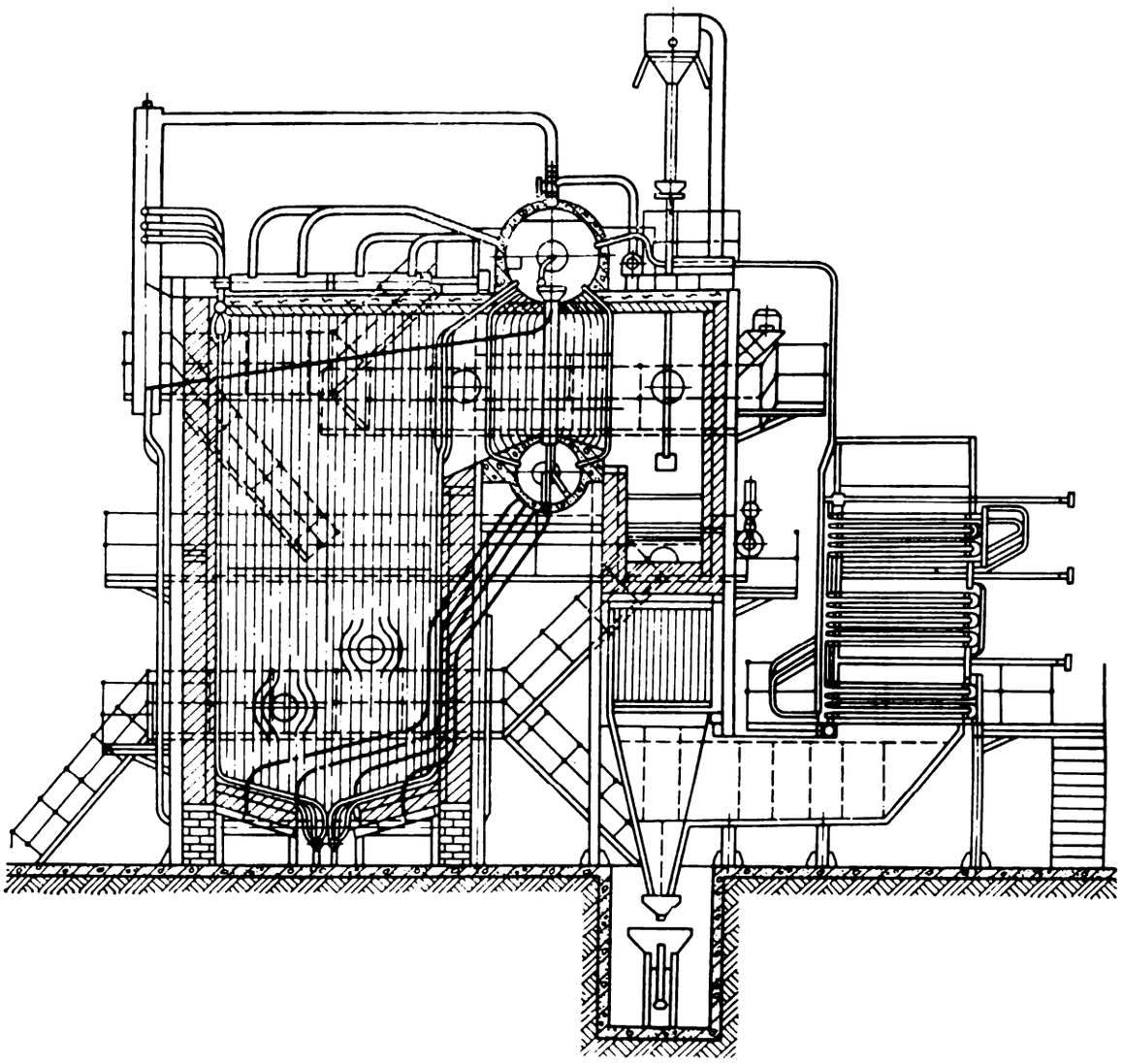

Fig. 58. ГМ-50-14 steam generator.

headers, while steam-and-water mixture is raised through the steam-generating tubes and screening tubes to the upper drum of the boiler. Water moves through the tubes without any external influence and only due to the difference in the densities of water at lower temperature (in the downcomers) and at higher temperature (in steam-generating tubes and screening tubes).

ДКВР steam generators can operate on solid, liquid or gaseous fuel. The steam generating capacity of such generators may vary from 2.5 to 35 t/hr. Steam generators with a generating capacity of

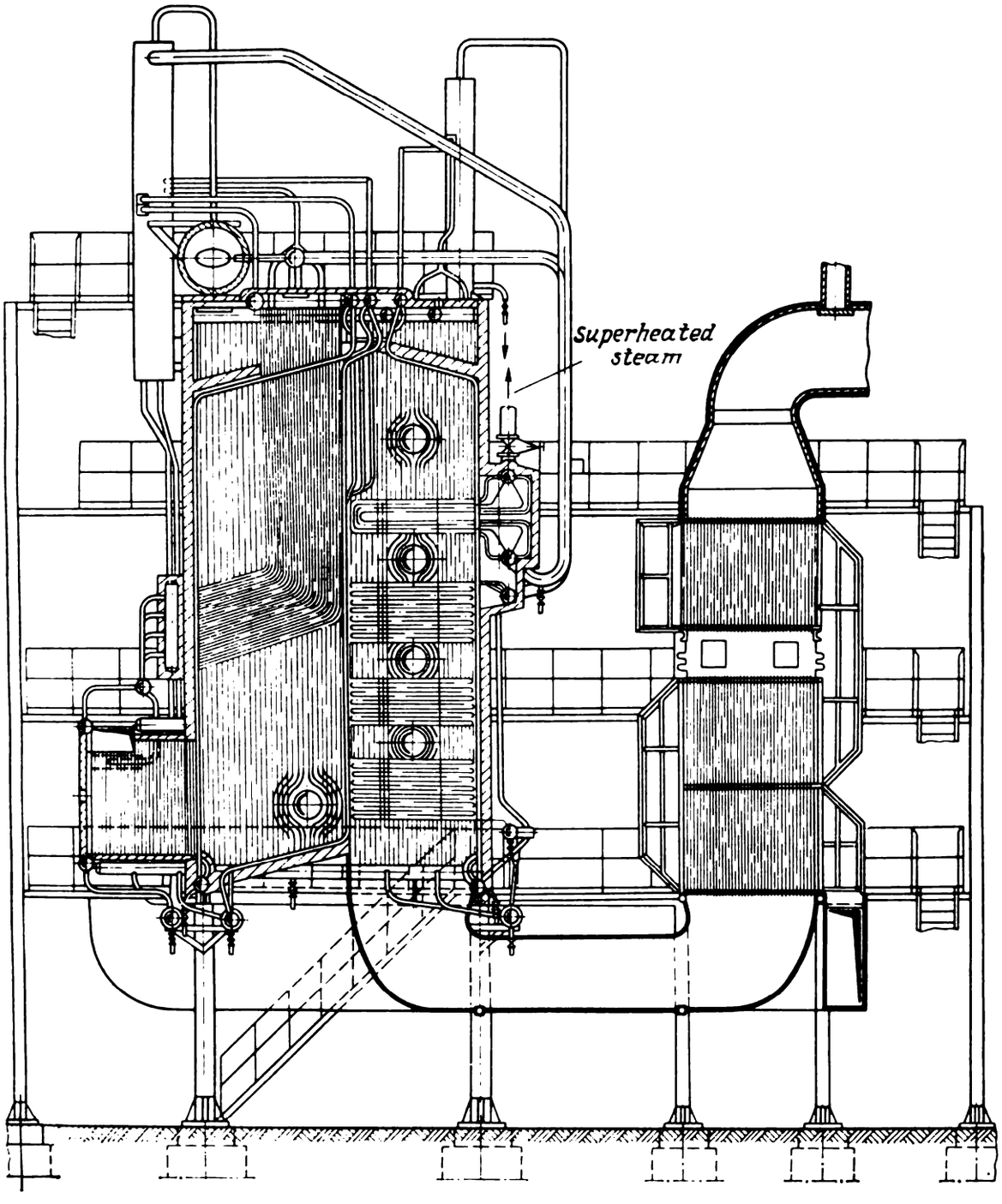

Fig. 59. Gas-and-oil fired steam generator.

35 t/hr at pressures of 3.9 MPa and a temperature 440° C are used in power plants.

Besides ДКВР steam generators, К-50-14, Г-50-14, Т-50-14 and ГМ-50-14 generators with a steam-generating capacity of 50 t/hr and pressure 1.3 MPa (Fig. 58), as well as commercially produced boiler units operating on gas or boiler oil and having a capacity of 50, 75, 100 or 150 t/hr (Fig. 59) are also used in industrial boiler installations.

Power-plant Steam Generators. Steam generators for power plants have a high power and steam pressures from 3.9 to 25.5 MPa. In

modern steam generators of moderate generating capacity (Fig. 60), the lower drum is replaced by lower furnace screen header *3*. Water from upper drum *1* is delivered through downcomers *4* into the lower water-wall headers from which water-and-steam mixture is raised through water-wall tubes *2* directly into the boiler drum or to the external cyclone steam separators connected to the drum. The tubes of the hind screen form a slag screen which is intended for cooling

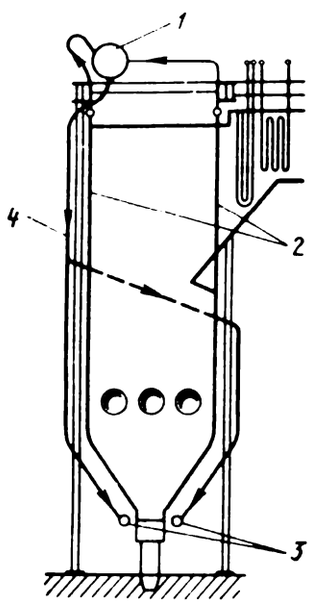

Fig. 60. Single-drum steam generator: *1* — drum; *2* — water-wall tubes; *3*—water-wall header; *4*—downcomers.

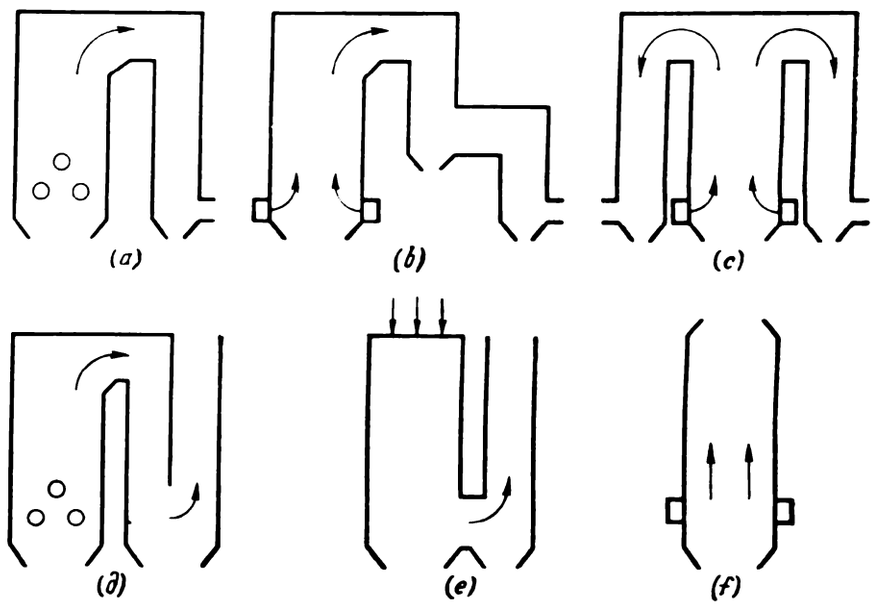

Fig. 61. Layout diagram for steam generators: (*a*) П-shaped arrangement; (*b*) two-step arrangement; (*c*) two-convective-shafts arrangement; (*d*) *U*-shaped convective shafts arrangement; (*e*) invertor-furnace arrangement; (*f*) tower arrangement.

the volatile fragments of the slag, thus preventing a blocking of the steam tubes (or superheater tubes).

The following types of steam generators are used in the USSR:

ПР: forced-circulation stationary steam generator without superheating of steam;

E: natural-circulation stationary steam generator with or without superheating of steam;

En: natural-circulation stationary steam generator with steam superheating and intermediate superheating;

ПП: straight-through stationary steam generator with steam superheating and intermediate superheating.

In the marking of a steam generator, the first number corresponds to the steam generating capacity, and the second to the steam pressure. Additional indices are introduced in the marking of a steam generator to indicate the type of fuel and the number of blocks.

Letters indicate the liquid, solid or gas fuel used in the furnace: thus M indicates a furnace in which fuel oil is burnt, Г is used for

gas-fuel furnaces, ГМ for burning gas and fuel oil, Ж stands for liquid slag disposal. The technical data on furnaces also contains the trade mark of the plant manufacturing the furnace. This information is given in parentheses right after the All-Union State Standard. Figure 61 contains the layout diagrams for steam generators.

Auxiliary Heating Surfaces. Steam Superheaters. The term superheating indicates the conversion of saturated steam into superheated

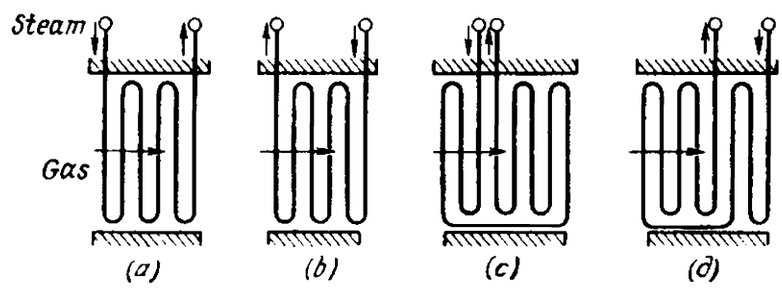

Fig. 62. Arrangement for including steam preheaters: (*a*) straight-through; (*b*, *c*) countercurrent; (*d*) hybrid.

steam. Steam superheaters are designed from small-diameter steel tubes through which steam is made to pass. The tubes are heated from the outside by hot gases. Steam superheaters may be horizontal or vertical. Depending on the direction of flow of steam and gases (Fig. 62), steam superheaters may be subdivided into straight-through (Fig. 62*a*), counterflow (Fig. 62*b*) or hybrid (Fig. 62*c*) circuits.

In accordance with the manner of heat absorption, steam superheaters are classified as convective superheaters *6*, located behind the boiler beam in the zone of comparatively low temperatures, and radiative superheaters *8*, which are placed in the furnace chambers (Fig. 63).

The temperature of superheated steam can be regulated by bypassing of a part of the gases outside the superheater, by mixing superheated steam with saturated steam (in this case only a part of the steam is made to pass through the superheater), or by injecting water into the steam flow (before and after the superheater).

Economizers. Economizers are intended for preheating of feed water by gases leaving the gas ducts of the steam generators. The temperature of the escaping gases is reduced, thus increasing the efficiency of the boiler. Economizers may be of nonsteaming type (in steam generators where the pressure does not exceed 2.4 MPa) or steaming type (in steam generators where the pressure exceeds 2.4 MPa). Nonsteaming economizers are made of finned cast-iron pipes, while the steaming type economizers are made of smooth steel pipes. The inclusion of a steaming economizer does not require the installation of any additional fixtures between the economizer and the steam-generator drum. Steaming economizers are used for partial generation of steam (up to 20% of the rated steam-generating

capacity). Boiling is not allowed to occur in nonsteaming economizers. A shut-off valve, safety valve and a reflux valve are included between a nonsteaming economizer and the steam-generator drum. In all kinds of economizers, water must flow from top to bottom (Fig. 64). In

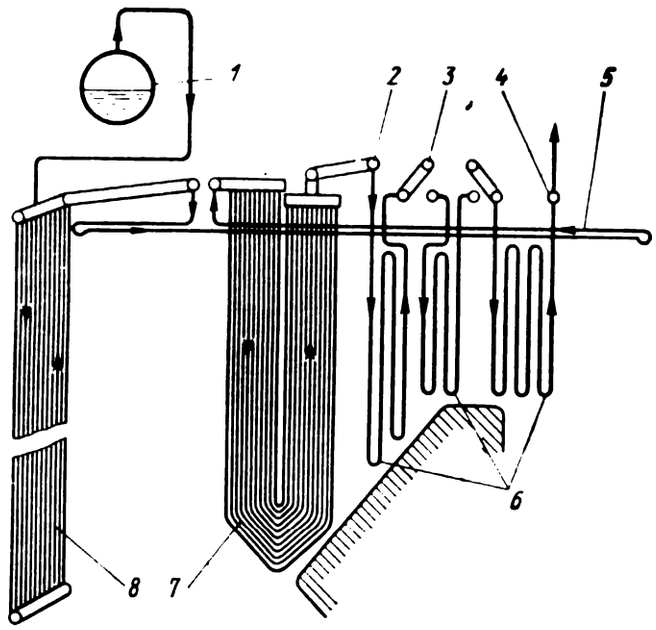

Fig. 63. Radiative-convective steam superheater:
1—drum; *2*, *3*—injecting steam coolers; *4*—superheated steam collector; *5*—overhead radiative steam superheater; *6*—convective steam superheater; *7*—screen-type steam superheater; *8*—wall radiative steam superheater.

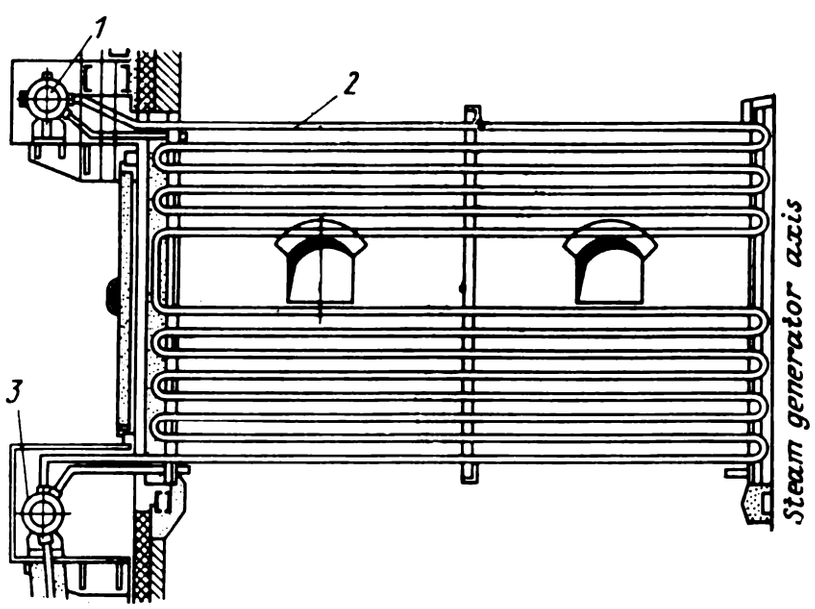

Fig. 64. Economizer:
1—outlet chamber; *2*—cooling coil; *3*—inlet chamber.

this case the air bubbles and gases trapped in the water will rise to the top without obstructing the flow of the water in pipes.

Air Preheaters. Preheating of the air supplied to the furnace of a steam generator improves the fuel combustion and increases the

efficiency of boilers. Preheating of air is especially important for igniting damp fuel.

At present, tubular air heaters are employed for heating air (Fig. 65). Exhaust gases from the economizer are supplied to the air heater, while air is forced between the pipes by fans at right angles. The air heater may have several inlets (two, three or more). Rotary regenerative air heaters (Fig. 66) are often installed after high-power steam generators.

The air heater is placed on a supporting frame *7*. The rotor consisting of plate sections *6* and encased in jacket *5* is placed in shell *2*

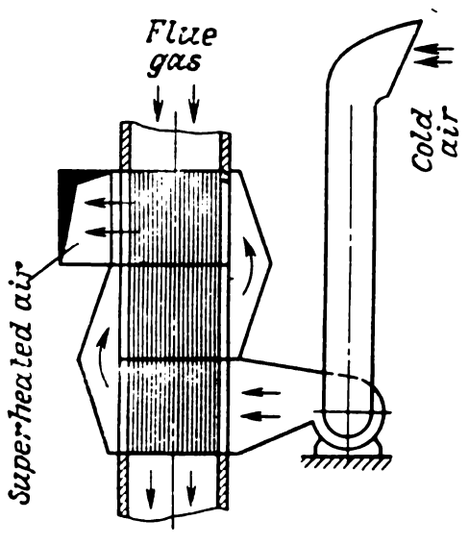

Fig. 65. Tubular air preheater.

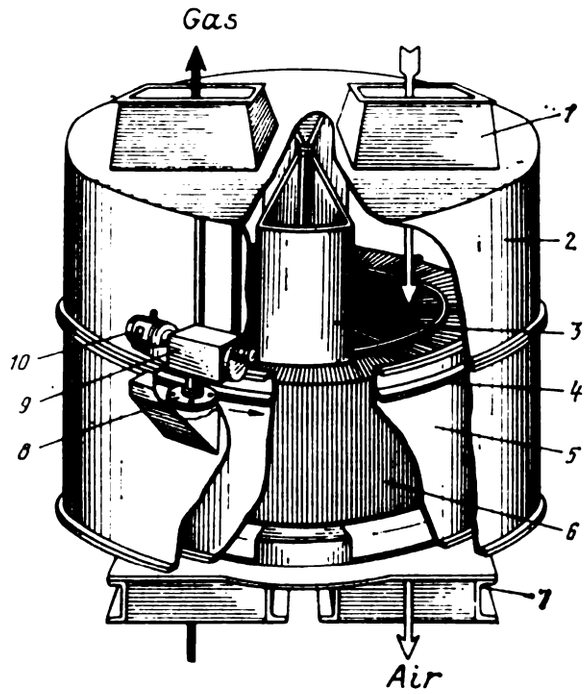

Fig. 66. Regenerative air preheater: *1*—ducts; *2*—shell; *3*—sector divider; *4*—gear ring; *5*—jacket; *6*—laminar section of rotor; *7*—supporting frame with ducts; *8*—driving gear wheel; *9*—reduction gear; *10*—driving electric motor.

of the air heater. With the help of sector divider *3*, two chambers (for gas and for air) are formed. Air and gases are supplied through duct *1*. The rotor is set into motion with the help of electric motor *10* through reduction gear *9*, gear ring *4* and driving gear wheel *8*. As the rotor moves, the heat is transferred from the gas flow to the circulating air.

Fittings and Outfit of a Steam Generator. The *fittings* of a steam generator are the instruments and accessories ensuring a safe and continuous operation of the generator. These include manometers, safety valves, stop valves, water-level indicating glass, blow-off cocks and taps. The equipment intended for facilitating the servic-

ing of a steam generator is called its *outfit*. Manholes, doors, peepholes, ash- and cinder-hopper shutters and smoke dampers form the outfit of a steam generator.

Arrangement for Producing Draught and Blast. In order to overcome the pressure difference caused by the motion of gases along the gas tract, special arrangements are made for creating a draught. The draught may be induced naturally or artificially. Natural draught is created by the chimney. The operation of the chimney is based on the difference in the densities of the air surrounding it and of the hot gases leaving it. The higher the temperature of the escaping gases and the higher the chimney (for the same diameter), the stronger the draught.

Smoke exhausters are employed in installations having a high hydraulic pressure difference, when the chimney alone is unable to ensure a proper draught. Draught induced by exhaust fans are called artificial draughts.

In order to overcome the resistance of the fuel layer (in the case of layer combustion of fuel), as well as the resistance of the air ducts, air is supplied under pressure produced by blower fans. The operation of the blowers and exhaust fans is regulated in such a way as to ensure a vacuum of about 20-30 pascals in the furnace.

Ash Collectors and Slag Disposal. Cinder and ash are formed when solid fuel is burnt. During the course of layer combustion, 75-90% of cinder and ash remains in the ash bunkers and gas ducts, while the remaining 10-25% of the ash is thrown out of the boiler in the form of smoke. When fuel is burnt in chamber furnaces, about 80-90% of the ash is blown away with the smoke. In order to protect the environment from pollution, smoke is purified in special devices called ash collectors with a view to remove the carbon particles. Ash collectors may be in the form of louver-type separators, cyclone ash collectors, fly-ash scrubbers, or of hybrid construction. The best results are obtained when electrostatic filters or hybrid gas purifiers are used.

Removal of cinder and ash may be carried out manually, mechanically, pneumatically or hydraulically. Hydraulic systems are the ones employed most frequently in large boilers operating on solid fuel.

Water Supply for Steam Generators. Water is supplied to the boilers with the help of piston pumps or centrifugal pumps. The pumps may be steam driven or electrically operated. The number of pumps, their capacity and pressure are chosen in accordance with the conditions of operation of the boilers or power plants.

Steam generators are fed with a mixture of the condensate returning from the steam users and chemically pure water. In view of various impurities that are present in natural water, it is not fit for use without purification. The quality of natural water is determined

by the amount of suspended impurities, hardness, pH value, concentration of dry residue and dissolved gases, oxidizability, etc.

During the operation of a steam generator, the salts responsible for the hardness of water are decomposed at the heating surface, thus forming a dense scale layer. The existence of scale deteriorates the transfer of heat from hot gases to water, decreases the efficiency and may lead to burning the pipes. In order to prevent the deposition of scale, water is subjected to special treatment before being supplied to the steam generator. Mechanical impurities are removed through clarification by filtering through a gravel layer, quartz sand or marble aggregate. Water is softened after removal of mechanical impurities. This can be accomplished by chemical, thermal or thermochemical means.

For low-capacity steam generators, internal water treatment is carried out by adding chemical substances called descalers to feed water. Descalers react with salts and convert them into a suspension containing sludge flakes. The sludge is removed with the help of blowdown water. Gases dissolved in the water are removed chemically or thermally. The process of removal of dissolved gases from water is called *deaeration*.

In steam generation, salts dissolved in water are entrained by water drops into the steam drum of the generator. These salts may be deposited in the tubes of the steam superheaters or carried away to the flow passage of the turbine. The salt content of boiler water is reduced by blowing down the steam generators. There are two kinds of blowdown. A periodic blowing is carried out at regular time intervals on the underside (lower drum, lower screen headers, etc.). Salts and sludge are thus entrained periodically with water. Continuous blow down is carried out from points with high salt concentration (upper water level, salt compartment, etc.). Special devices are sometimes employed to use the heat of blow-down water. The blowing down of steam generators helps to establish a material balance of salts, i.e. ensure such working conditions under which the amount of salts arriving with the feed water is equal to the decrease in the salt content by blowing down or washing away.

Under steady-state conditions, the material balance equation for the boiler is

$$S_{fw}D_{fw} = S_sD_s + S_{bw}D_{bw},$$

where S_{fw}, S_{bw} and S_s denote the salt content in feed water, boiler water and steam respectively, D_{fw} is the amount of feed water supplied to the steam generator and D_s is the steam-generating capacity of the steam generator.

The amount of feed water is

$$D_{fw} = D_s + D_{bl},$$

where D_{bl} is the amount of blowdown water.

The solution of the above two equations allows us to determine the amount of blowdown water D_{bl}:

$$D_{bl} = [(S_{fw} - S_s)/(S_{bw} - S_{fw})]\, D_s. \qquad (19.1)$$

Dividing both sides of this equation by D_s, we obtain the relative blowing factor (for steam)

$$p_s = (D_{bl}/D_s)\, 100 = [(S_{fw} - S_s)/(S_{bw} - S_{fw})]\, 100\%.$$

The expression for blowing down of feed water can be obtained similarly:

$$p_w = (D_{bl}/D_{fw})\, 100 = [(S_{fw} - S_s)/(S_{bw} - S_s)]\, 100\%.$$

If $S_s = 0$, we get

$$p_s = [S_{fw}/(S_{bw} - S_{fw})]\, 100\%$$

and

$$p_w = (S_{fw}/S_{bw})\, 100\%.$$

In order to obtain pure steam (with a smaller entrainment of salts), it is separated in cyclones or in special devices which ensure a change in the direction of steam flow. The suspended water drops in the steam are separated and returned to the water in the steam generator. In drum-type steam generators, step-by-step evaporation method is employed (Fig. 67). For this purpose, partitions are installed in the drum. Feed water is supplied to the first (clean) compartment *1* where most of it is converted into steam. The residual water with a higher salt concentration passes through hole *2* in the partition into the second compartment *3* where steam generation is continued and at the same time the salt concentration in the water which is passed on to the next compartment increases. Thus, the salt concentration in the last compartment is higher than in any of the preceding ones. A continuous ejection of blowdown water takes place from the last compartment *4*. The application of step-by-step evaporation reduces the amount of the blowdown water required in the process, and increases the economic effect of the boiler. Modern boiler installations are equipped with automatic regulators of the water level in

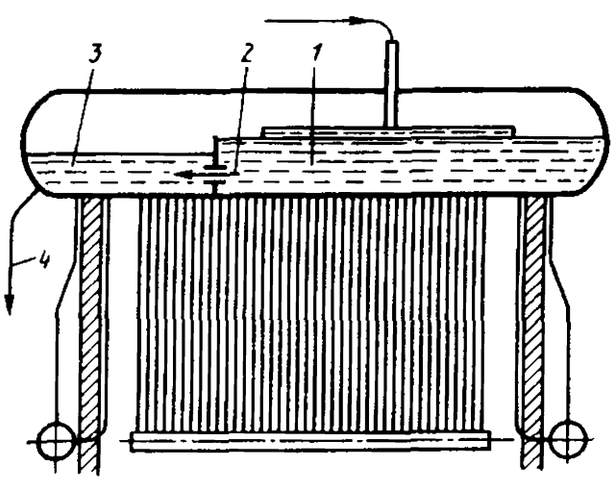

Fig. 67. Step-by-step water evaporation:
1, *3*—drum compartments; *2*—hole; *4*—blowdown water disposal.

the steam generator drum and regulators of the combustion process. Automatization of boilers increases their efficiency and ensures a safe and reliable operation of the equipment.

19.5. Heat Balance Equations and Efficiency of a Steam Generator

The *heat balance equation of a boiler* is the relation between the heat energy supplied to the furnace and the heat consumption. Heat balance equation can be written for 1 kg of solid (liquid) fuel or 1 m³ of the gaseous fuel:

$$Q_a^w = Q_1 + Q_2 + Q_3 + Q_4 + Q_5 + Q_6, \tag{19.2}$$

where Q_a^w is the introduced (available) heat, Q_1 the loss of heat consumed in steam generation, Q_2, Q_3, Q_4, Q_5 and Q_6 are the heat entrained by gas, the combustible loss, loss due to incomplete combustion, heat lost to the surroundings, and the heat entrained by the slag respectively.

On the other hand,

$$Q_a^w = Q_l^w + Q_a + Q_s + Q_d - Q_c,$$

where Q_l^w, Q_a, Q_s, Q_d and Q_c respectively denote the low heat value per unit working mass, heat introduced into the furnace with the preheated air, sensible heat of the fuel, heat introduced into the furnace by the steam-jet forced draught or by steam for fuel atomizing and the heat spent to decompose the carbonates during the combustion of shale.

Putting $Q_a^w = Q_l^w$, we can write Eq. (19.2) in the form

$$Q_l^w = Q_1 + \Sigma Q_{loss}, \tag{19.3}$$

where Q_l^w is the heat of combustion of the fuel, Q_1 is the net heat (spent usefully to generate steam), and ΣQ_{loss} is the sum of all heat losses.

The sum of heat losses is given by

$$\sum Q_{loss} = Q_2 + Q_3 + Q_4 + Q_5 + Q_6.$$

Dividing the left- and right-hand sides of Eq. (19.3) by Q_l^w and multiplying by 100%, we get

$$q_1 + q_2 + q_3 + q_4 + q_5 + q_6 = 100\%,$$

where

$$q_1 = (Q_1/Q_l^w)\,100\%, \text{ etc.}$$

The ratio of net heat Q_1 to the heat Q_l^w is called the *efficiency of the steam generator*

$$\eta_{sg} = (Q_1/Q_l^w)\,100\%.$$

The net heat is given by

$$Q_1 = (D_{su}/B)(i_{su} - i_{fw}) + (D_s/B)(i'' - i_{fw}) + (D_{bl}/B)(i' - i_{fw}),$$

where D_{su} and D_s denote the amount of superheated and saturated steam released by the steam generator respectively, D_{bl} is the amount of blowdown water, and i_{su}, i'', i' and i_{fw} denote the enthalpy of superheated steam, saturated steam, bioler water and feed water respectively.

It follows from the heat balance equation (19.3) that the lower the heat loss ΣQ_{loss}, the higher the value of Q_1, and hence the efficiency η_{sg} of the steam generator.

19.6. Steam Generators Operating on Waste Gases

The distinguishing feature of steam generators operating on waste gases (GWG) is the absence of a furnace. Steam is generated in this case by using waste gases from industrial furnaces and engineering plants. The main elements of such utilizer-generators are the evaporation surfaces, economizers and steam superheaters. The generating capacity of such generators depends on the amount of the waste gases used for steam generation and varies from 2 to 40 t/hr at a steam pressure of up to 3.9 MPa. In large-scale metallurgical plants, the steam generators operating on waste gases produce up to 150-200 t/hr steam. Depending on the temperature of the waste gases, steam generators are conditionally divided into low-temperature ($t_g < 800$-900 °C) and high-temperature ($t_g > 1100$-1200 °C) generators. Low-temperature utilizer-generators are the ones used most frequently. Water circulation in the steam-generating circuit may be either natural or forced.

Steam generators employing waste gases are installed at metallurgical plants, in building material industry, chemical industry, etc. In chemical industry, utilizer-steam generators form a part of the equipment used for producing sulphuric acid and synthetic rubber. They are installed behind roasting furnaces, in plants for catalytic conversion of methane, hydrogenative cracking, etc. They form a part of the units for dry quenching of coke, and for several other plants.

High-temperature GWG's are connected to the working chambers of furnaces either directly or through gas ducts. One of the peculiarities of working with GWG's is the contamination of the heating surface by liquid and solid entrainment from engineering units. The arrangement of heating surfaces in high-temperature GWG's is similar to that in power-plant steam generators. Power-plant generators with natural circulation (Fig. 68) may be installed as GWG's.

Figure 69 shows a GWG with multiple forced circulation in a dry coke-quenching plant. Figure 70 shows a plant for dry quenching of coke, in which a gas-tube type GWG has been installed.

In low-temperature steam-generators, the ratio $\Sigma V_g/D$ of the volume of waste gases to the mass of generated steam is 8 m³/kg at t_g =

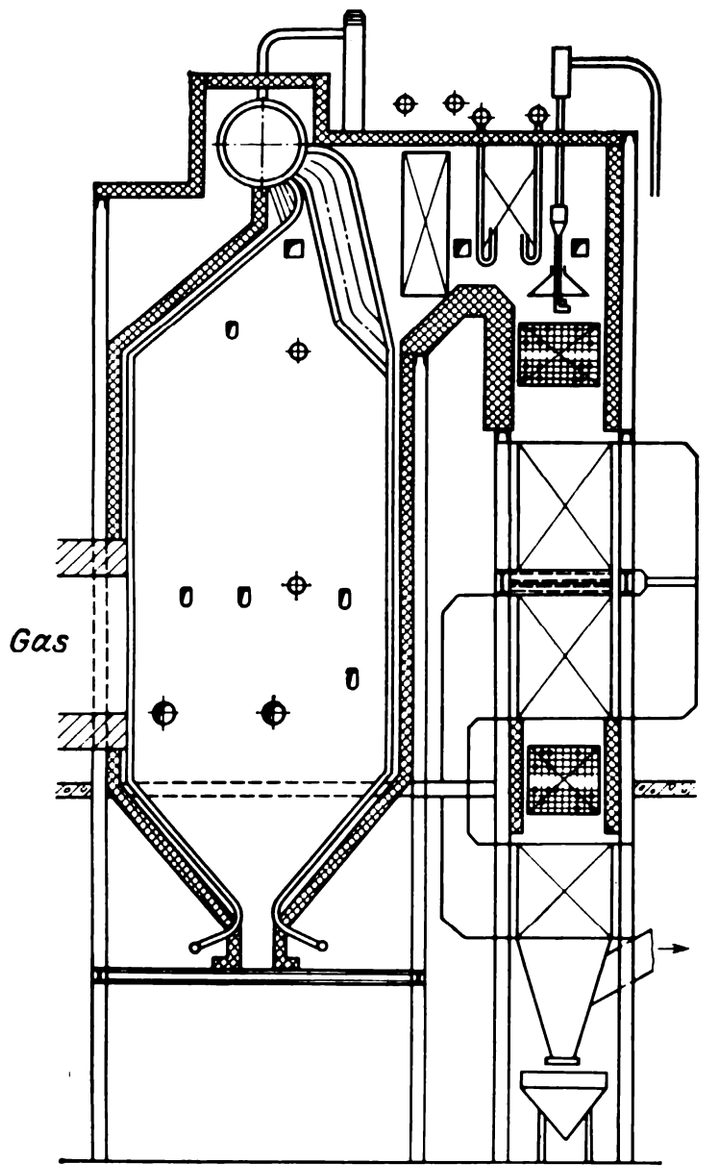

Fig. 68. Steam generator operating on waste gases (GWG).

650-550 °C, while it is 3.0-3.5 m³/kg at t_g = 850-800 °C and 2.0-2.5 m³/kg at t_g = 1250-1100°C. In ordinary steam generators, $\Sigma V_g/D$ = 1.2-1.5 m³/kg. The first to encounter the waste gases in a GWG is the steam superheater. This is followed by the evaporator installation and the economizer. Figures 71 and 72 show a straight-through separator GWG and a multiple forced circulation (MFC) generator. Figure 73 shows a tower-type arrangement of a GWG with MFC.

In order to use the heat of the low-temperature waste gases from low-power installations, horizontal and vertical layouts are used for gas-tube generators (Figs. 74 and 75).

Waste gases from engineering plants sometimes contain combusti-

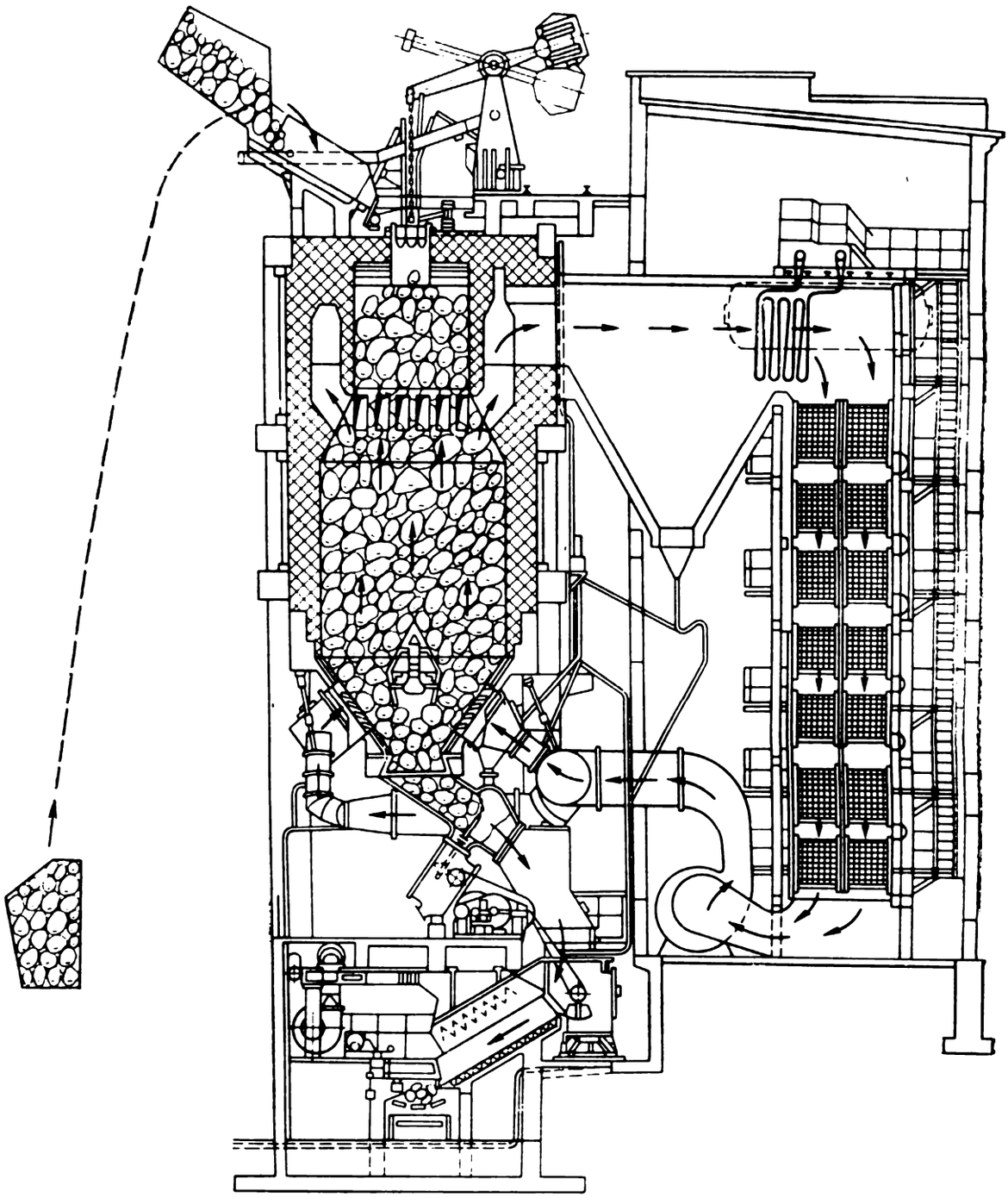

Fig. 69. GWG with multiple forced circulation in dry coke-quenching plant.

ble components. An after-burner chamber is envisaged for a rational use of these combustible materials. Figure 76 shows a GWG operating on waste gases containing hydrogen sulphide. Reburning of hydrogen sulphide takes place in a cylindrical chamber equipped with two grates to control the combustion. After this, the gases

pass through two smoke tube bundles which form the evaporation surface of the steam generator. Condensation of sulphur takes place in the cooling of the combustion products in smoke tubes. In order to facilitate the flow of sulphur, the smoke tubes are slightly inclined in the direction of the gas flow. Sulphur is removed from the intermediate (between the first and second evaporative bundles) chamber and the exit chamber (after the second bundle). Such a steam generator at the flow rate of 7400 m^3/hr of a gas containing 2100 m^3/hr combustible material generates 2.1 kg/s of saturated steam at a pressure of 0.5 MPa.

Figure 77 shows a steam generator for using the waste gases from cyclone furnaces employed for burning sulphur. Such a steam generator with natural circulation is intended for using the heat obtained

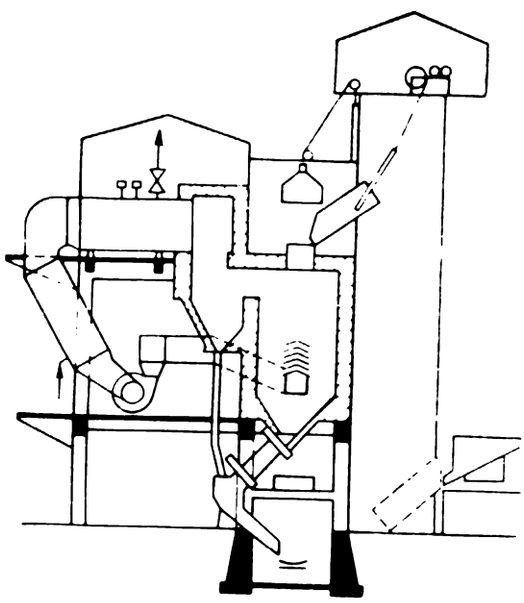

Fig. 70. Gas-tube type GWG in dry coke-quenching plant.

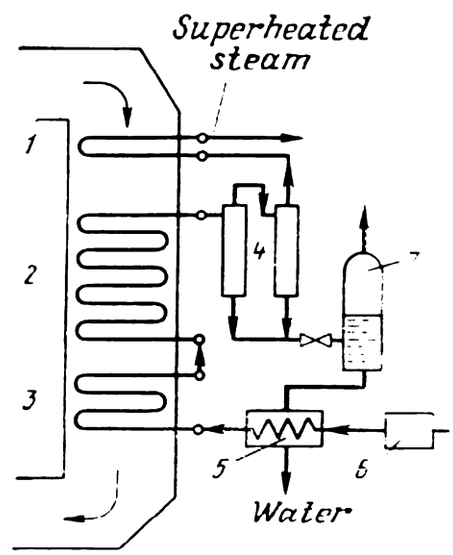

Fig. 71. Straight-through separator GWG:

1—steam superheater; *2*—evaporation section; *3*—economizer; *4*—two-stage steam separator; *5*—blowdown water cooler; *6*—feed pump; *7*—expander.

by burning 100 tons of sulphur per day. The gas temperature after the horizontal cyclone chamber (at the radiative chamber inlet) is 1300 °C, while the temperature of the escaping gases is 520 °C. This steam generator produces 2.87 kg/s of steam at a pressure of 3.9 MPa.

The steam generator ПКК using the heat of the waste gases from carbon black production is shown in Fig. 78. The generator has a horizontal primary furnace for burning the gases. The waste combustible gases are mixed with natural gas of fuel oil and then ignited. The combustion products from the primary furnace pass the

convective evaporation sections and the steam superheater, after which they pass through the air preheater and the economizer. The generating capacity of such a steam generator is 7.83-23.3 kg/s at a pressure of 4.5-2.4 MPa.

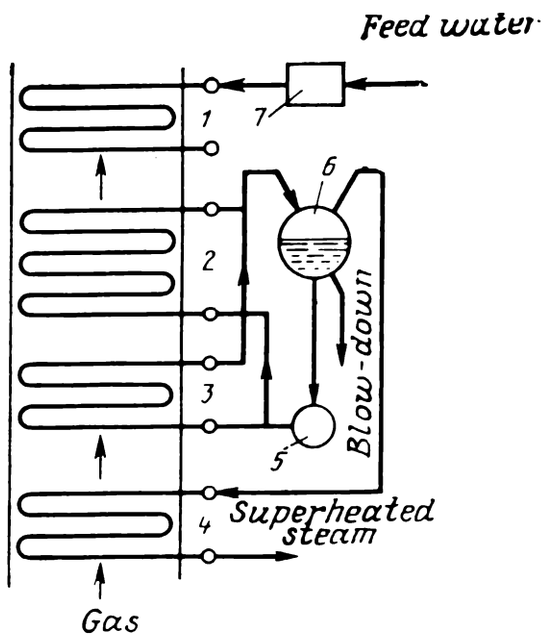

Fig. 72. GWG with MFC:
1—economizer; *2*—second evaporation section; *3*—first evaporation section; *4*—steam superheater; *5*—circulation pump; *6*—steam-separating drum; *7*—feed pump.

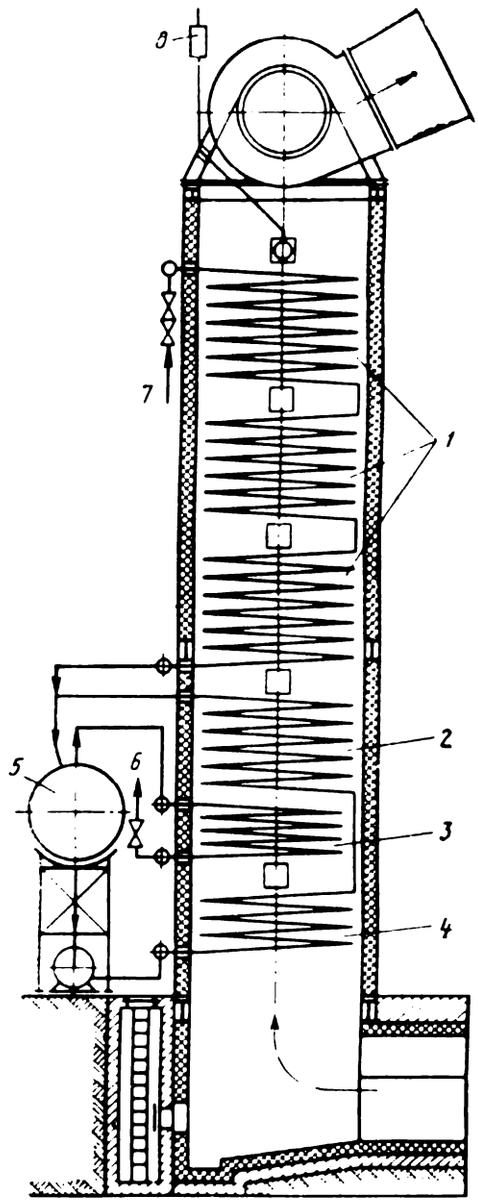

Fig. 73. Tower-type arrangement of a GWG with MFC:
1—steaming economizer; *2*—second set of evaporating coils; *3*—steam superheater; *4*—first set of evaporating coils; *5*—steam-separating drum; *6*—superheated steam; *7*—feed water supply; *8*—pellet supply for cleaning coils.

Steam generators working on waste gases serve as an additional link and are beneficial for a more effective use of the primary product. Power engineering units (PEU) are being developed at present with a view to considerably improve the technological and power efficiency of the entire complex of the raw material processing. The engineering and power elements of such units are combined. The PEU

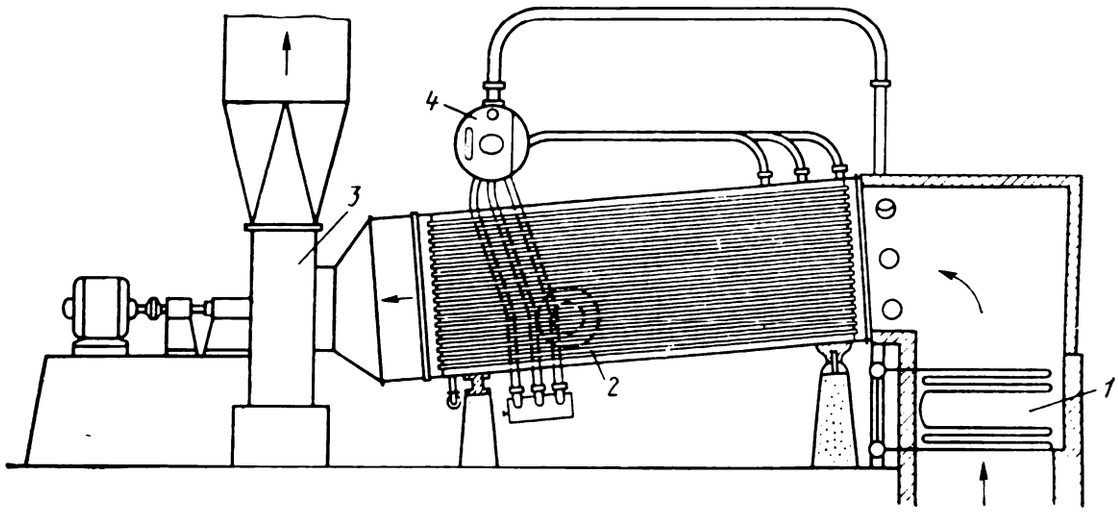

Fig. 74. Horizontal gas-turbine GWG:
1—steam superheater; *2*—evaporation system; *3*—smoke exhauster; *4*—separation drum.

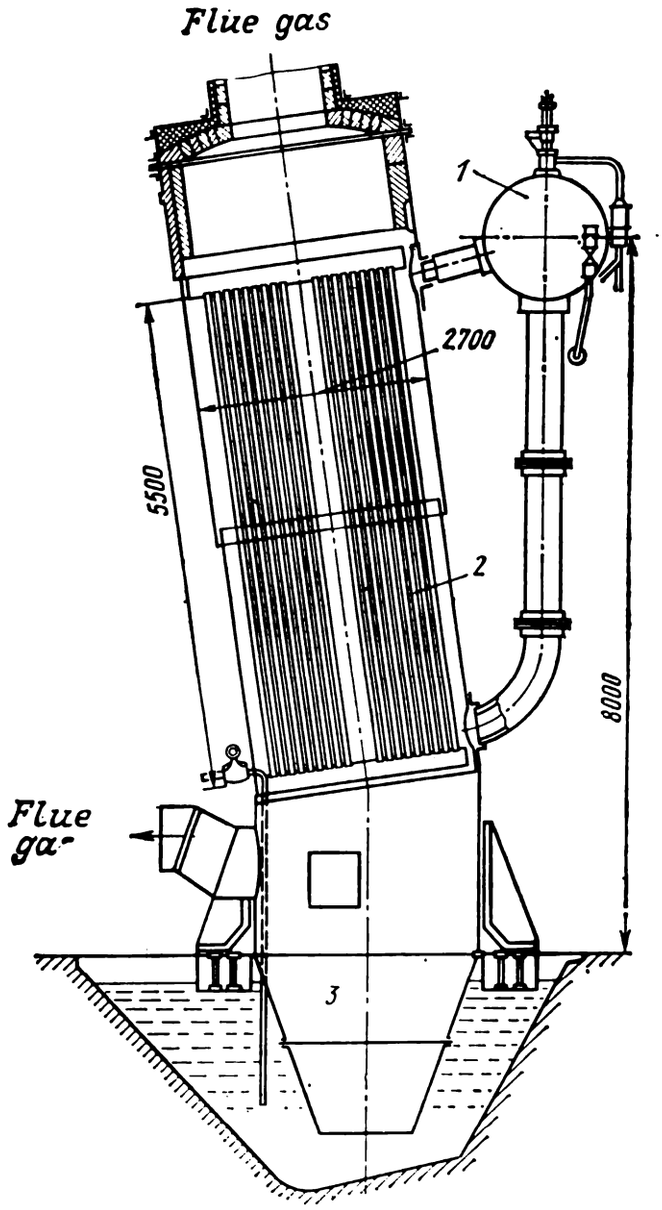

Fig. 75. Vertical gas-turbine GWG:
1—separating drum; *2*—evaporation system; *3*—hydraulic seal.

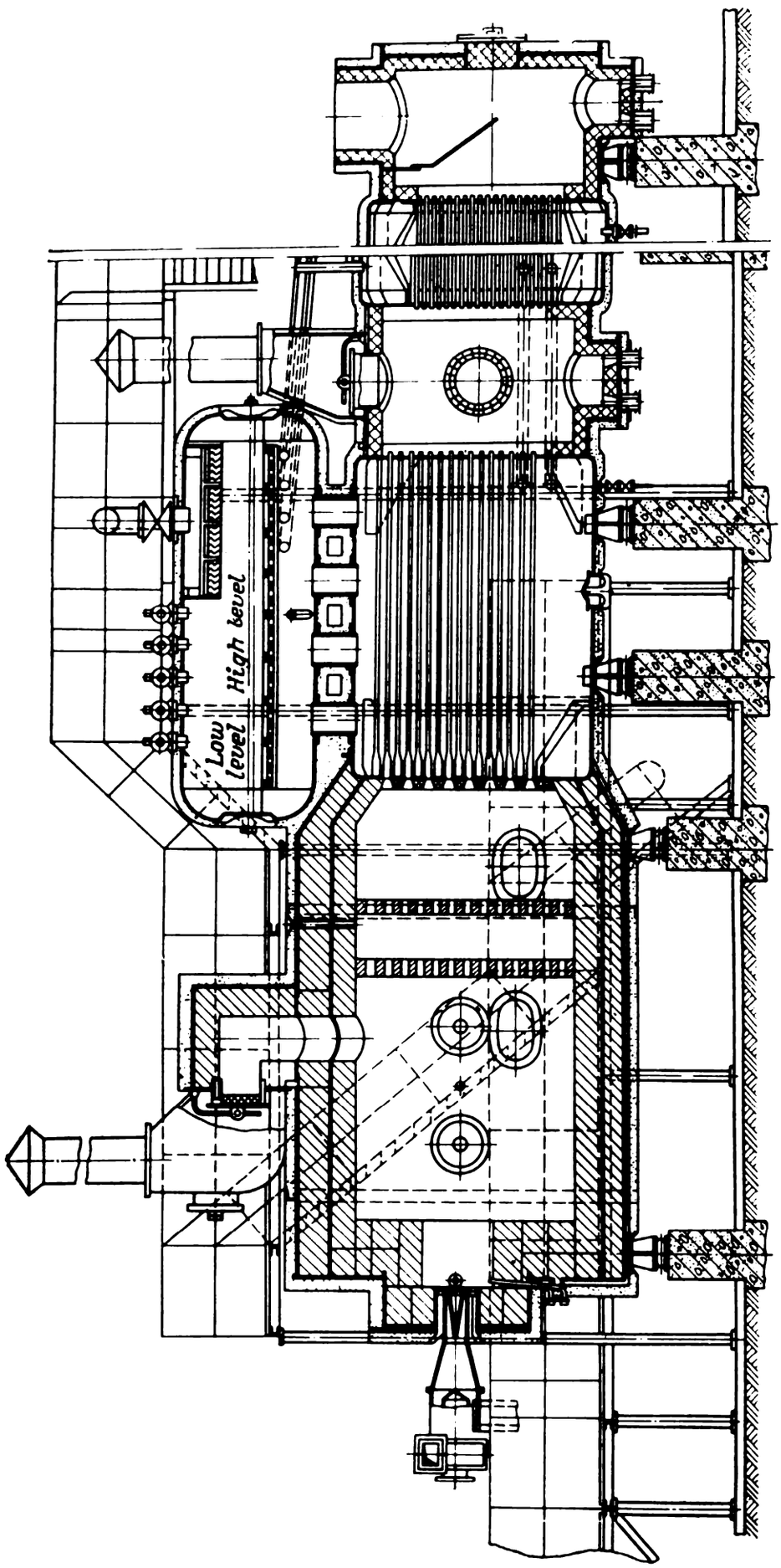

Fig. 76. GWG for utilization of heat produced as a result of reburning of hydrogen sulphide and condensation of sulphur.

shown in Fig. 79 is intended for high-temperature hydrothermal treatment of natural phosphates. The main element of this unit is a cyclone melting chamber which has a special lining and is equipped with a vapour cooling system. The phosphate powder is introduced

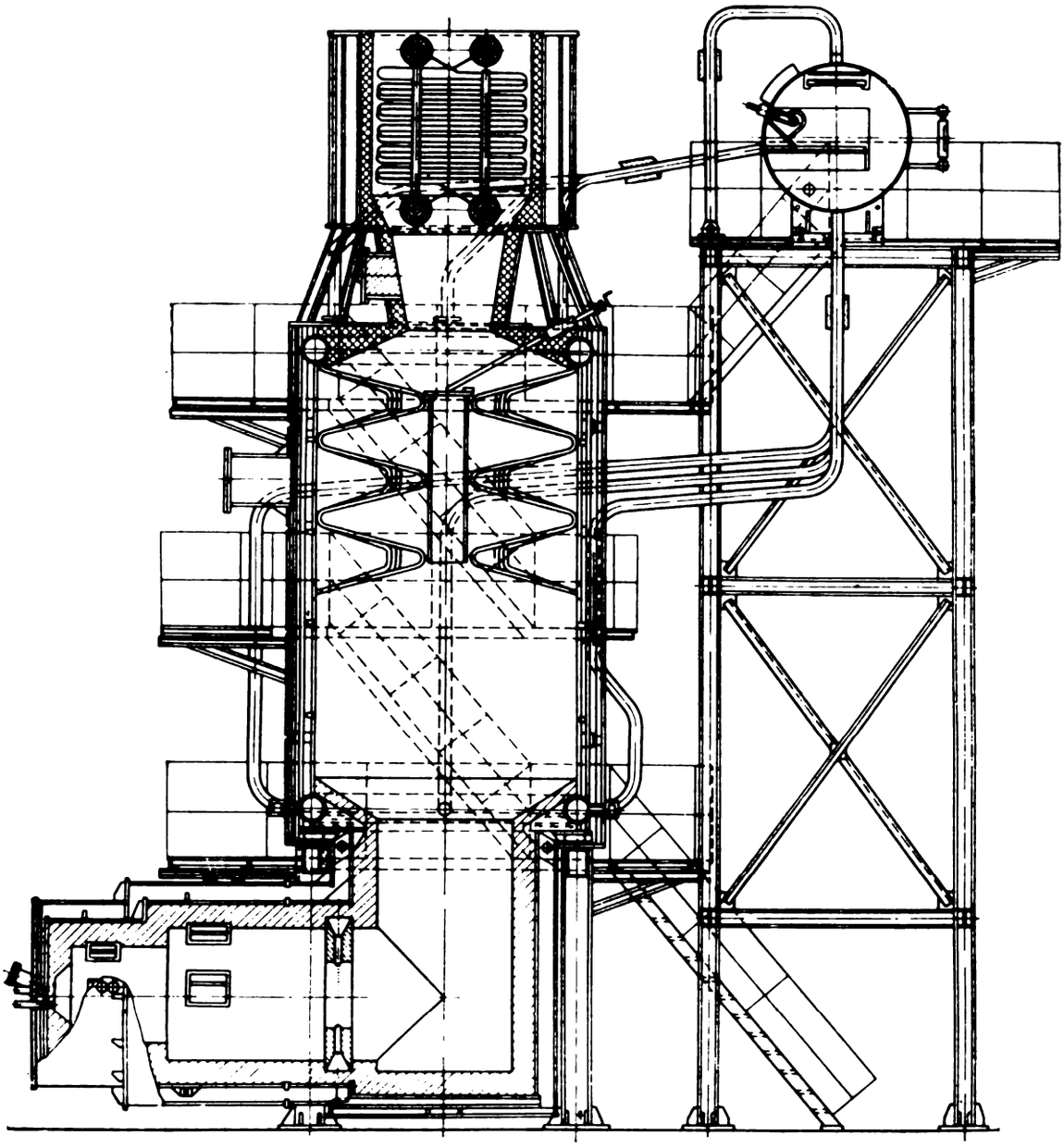

Fig. 77. Steam generator for utilization of waste gas heat produced by combustion of sulphur.

into the furnace from top while the liquid or gaseous fuel and air are introduced tangentially. The cyclone chamber is made of thermally insulated steel tubes covered with tenons and connected to the natural circulation circuit of the unit. When phosphate rock (fluoropatite) is heated in the cyclone chamber to 1500-1600 °C, fluorine enters the gaseous medium in the chamber. Molten defluorinated phosphates are captured in the cyclone chamber. The gaseous combustion products at a high temperature enter the radiative chamber

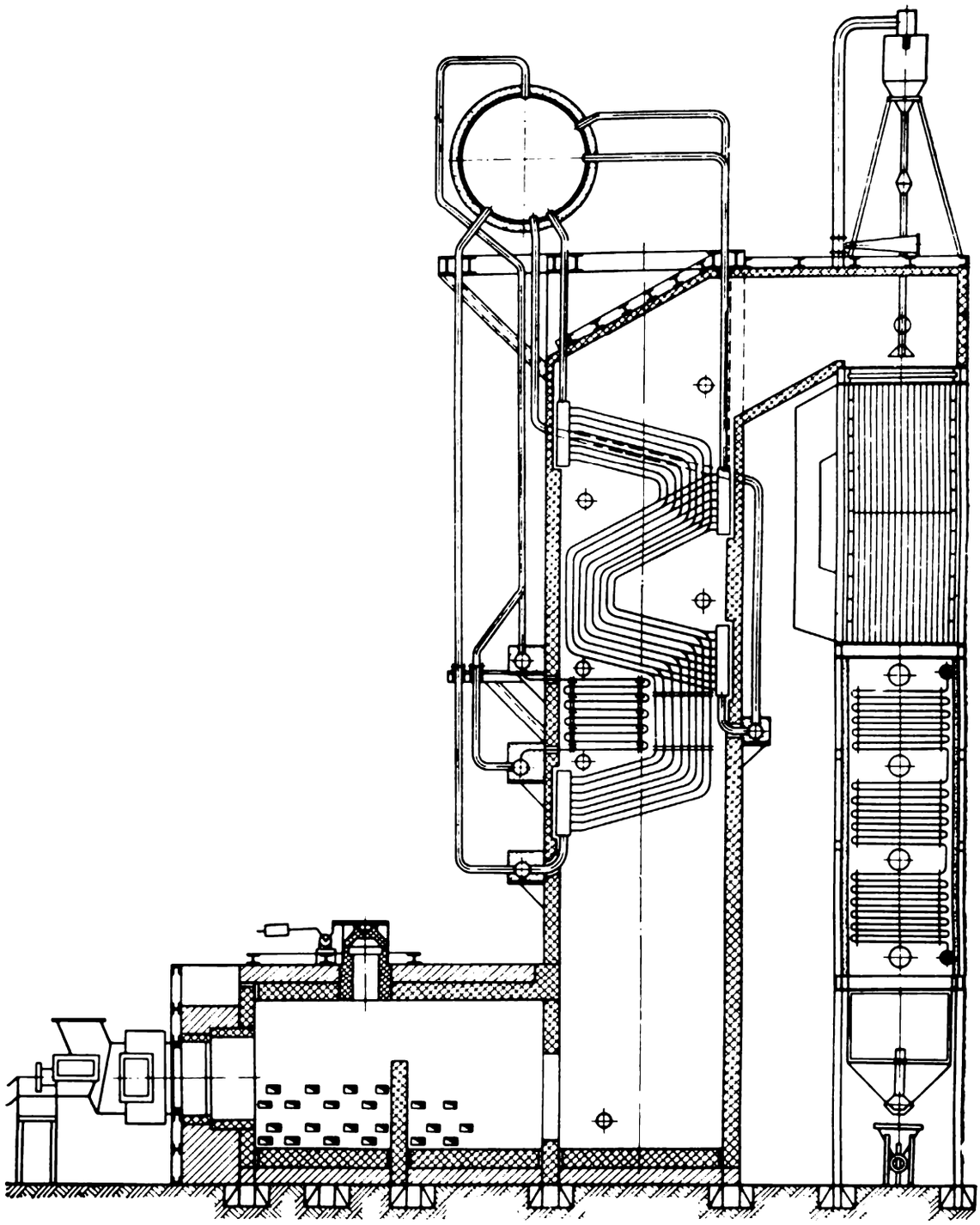

Fig. 78. ПКК steam generator for using waste gas in carbon black production.

and pass through the gas ducts of steam superheater and air preheater. The temperature of gases entering the adsorption section for capturing fluorine is 200 °C.

Such a unit produces 1.95 kg/s of defluorinated phosphate and 0.85 kg/s of steam at a pressure of 4 MPa. Besides defluorinated phosphate this unit can also produce sodium fluoride. Figure 80 shows the layout of a combined power engineering unit for roasting pyrite.

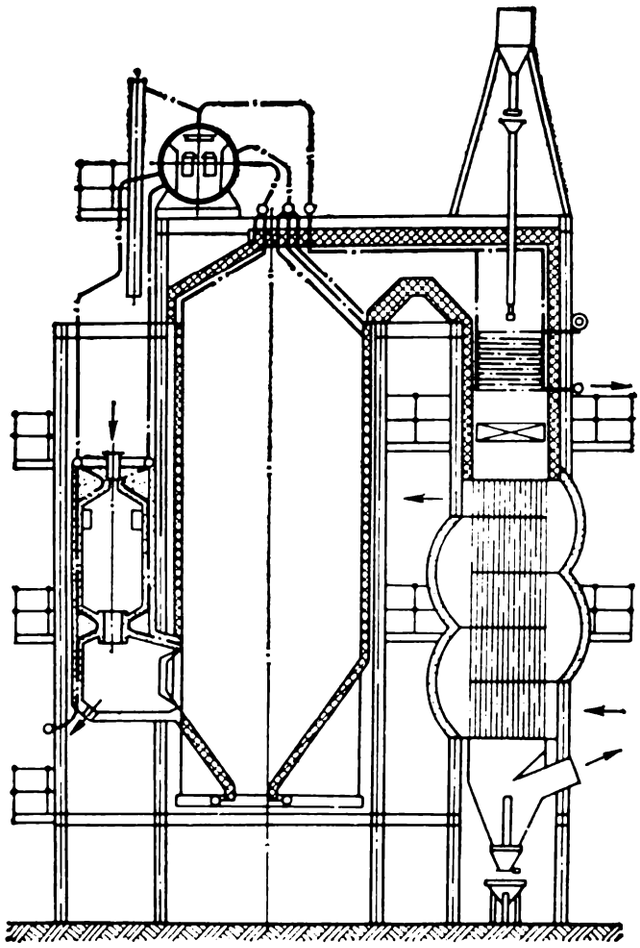

Fig. 79. Power engineering unit for hydrothermal phosphate treatment.

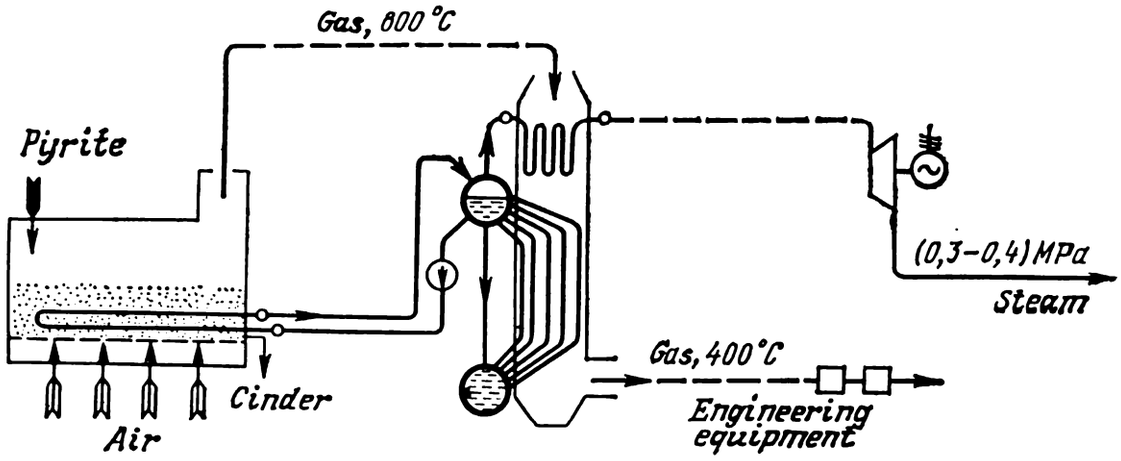

Fig. 80. Layout of a combined PEU for roasting pyrite.

19.7. Hot-water Boilers

Hot water boilers may be made of cast iron or steel.

Cast Iron Hot-water Boilers are made of cast iron sections which are connected through nipples and coupling bolts to form the heating surface of the boiler. Water is circulated through the inner channels of the sections. Hot combustion products of fuel flow past the outer surface of the sections (facing the furnace). The furnaces in such

boilers may be inside (between the sections) or outside the sections.

When high-quality fuels (coal and anthracite) are burnt, boilers with furnaces installed between the sections are employed, while for low-quality fuel (having a large yield of volatile matter), it is advisable to use furnaces outside the sections.

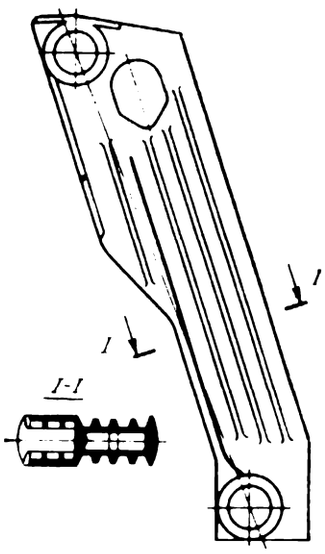

Fig. 81. The middle section of a cast iron hot water boiler КЧ.

In somewhat modernized furnaces of cast iron boilers, it is possible to burn liquid and gaseous fuel. Two types of cast-iron hot-water boilers are produced at present: small-size boilers with inner furnaces and A-type boilers. The nominal heating surface (NHS) of small boilers is 1-4 m^2, while for A-type boilers, it is 7-156 m^2.

The nominal heating surface, equal to 1 m^2, is the heating surface of a cast iron sectional furnace which ensures a heating power of 11.63 kW under a manual operation of the furnace using high-grade anthracite and a

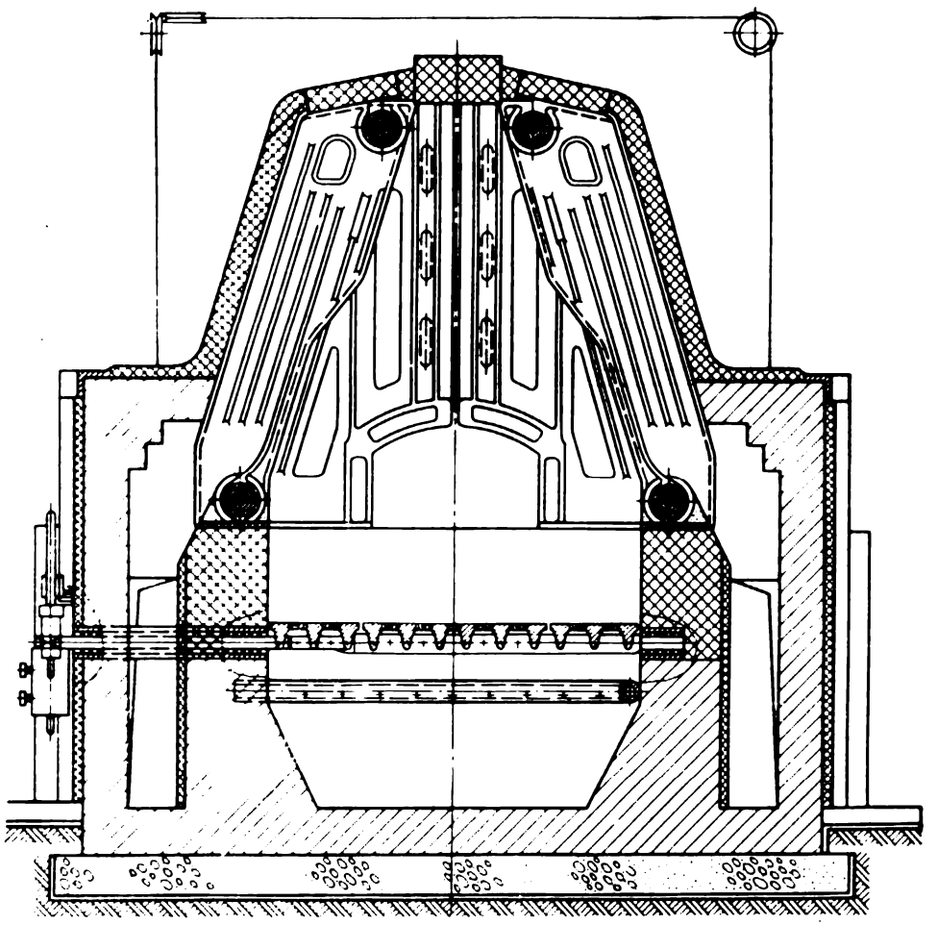

Fig. 82. Boiler Universal-6M.

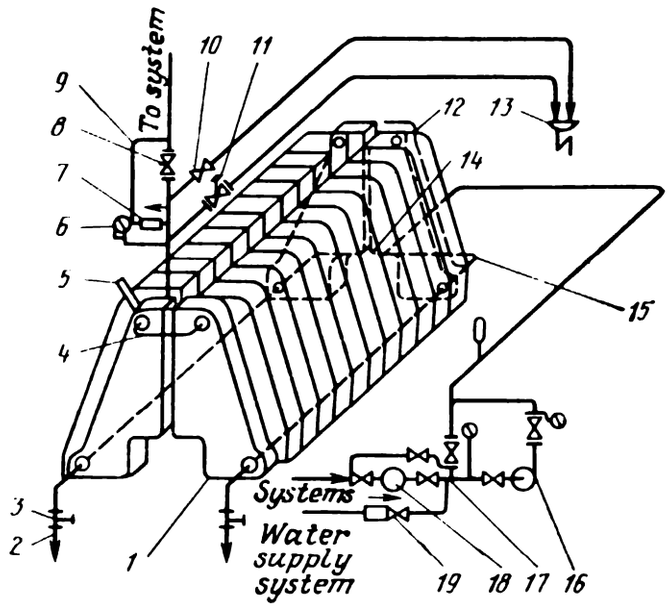

Fig. 83. Connection of a cast iron hot-water boiler to a heat supply system:

1—section of boiler; *2*—drain tube; *3*—drain cock; *4*—upper T-joint; *5*—thermometer; *6*—manometer; *7*—reflux valve; *8*—gate; *9*—by-pass line; *10*—air gate; *11*—safety valve; *12*—plug; *13*—sink; *14*—lower T-joint; *15*—tap; *16*—pump; *17*—pump by-pass; *18*—mud trap; *19*—feed valve.

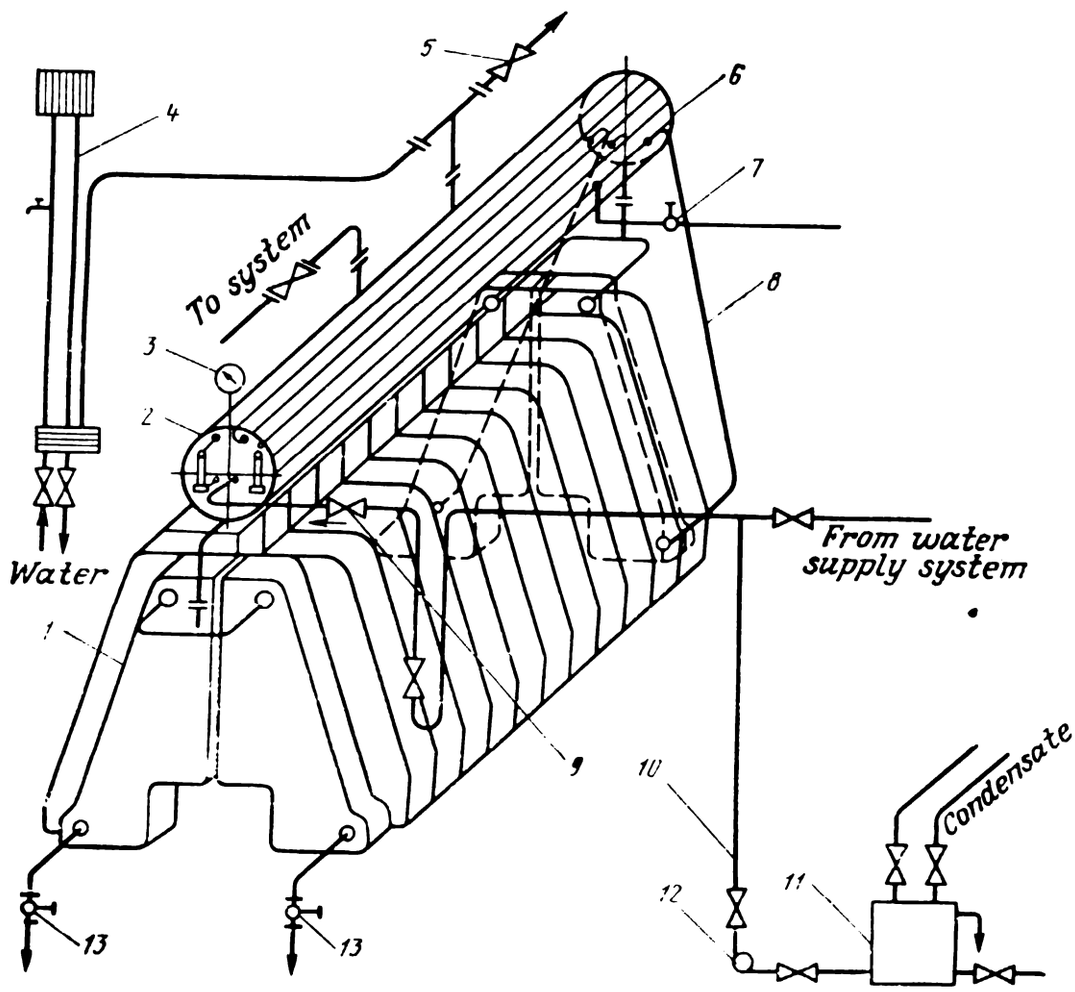

Fig. 84. Connection of a cast iron steam generator to a heat-supply system: *1*—boiler section; *2*—glass windows of water gauge; *3*—manometer; *4*—hydraulic back-pressure valve; *5*—air valve; *6*—steam collector; *7*—blowdown cock; *8*—circulation pipe; *9*—reflux valve; *10*—feed pipe-line; *11*—condensate tank; *12*—pump; *13*—drain cocks.

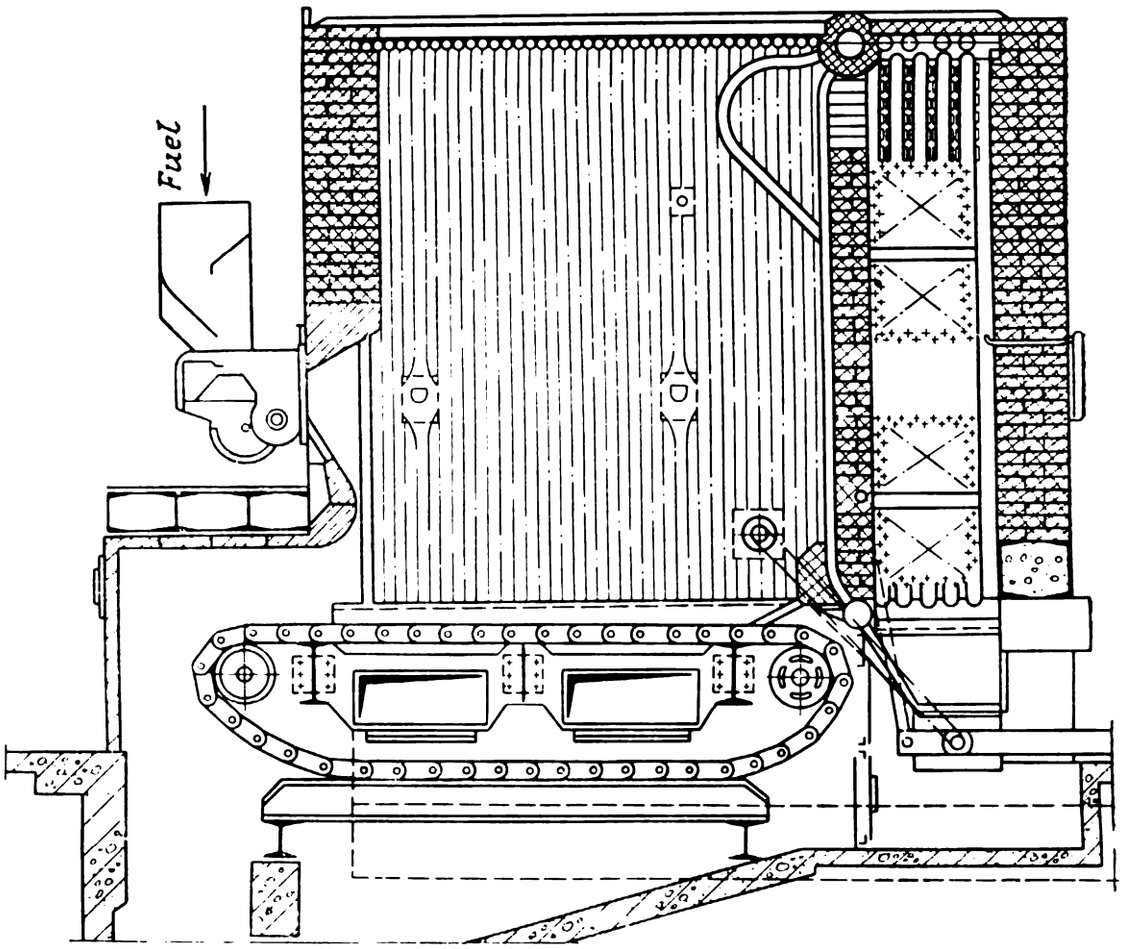

Fig. 85. Hot-water boiler KB-TC-4.

heat flux $Q/R_{fs} = 0.58$ MW/m^2 of the firebed surface when the efficiency is not less than 0.7.

Depending on the size of the boiler sections, nominal heating area and the heating power, A-type boilers are divided into КЧ-1 (7-20 m^2), КЧ-2 (Universal 5, Universal 6, Universal 6M) (28-112m^2) and КЧ-3 groups (Energy-3, Energy-6, Tula-2 and AB-2) with an NHS of 56-156 m^2.

The average heat removal of Q/H per hour from 1 m^2 heating surface of cast iron hot-water boilers is 9.3-13.9 kW.

Figure 81 shows the middle section of a cast iron hot-water boiler (КЧ). Sections of КЧ-2 and КЧ-3 boilers differ from КЧ-1 in their configuration and the distance L between the nipples. (For КЧ-1, КЧ-2 and КЧ-3, L = 890, 1100 and 1330 mm, respectively.)

Another type of cast iron hot-water boiler, "Universal-6M", is shown in Fig. 82, while Fig. 83 shows the connecting diagram for a cast iron hot-water boiler to the heat-supply system. Water can be heated in cast iron boilers up to 115 °C (at a pressure 0.344 MPa of the system) or 95°C (at a pressure up to 0.588 MPa).

Cast iron boilers which are additionally equipped with a steam collector can be used for generating steam at a pressure up to 68.6 kPa.

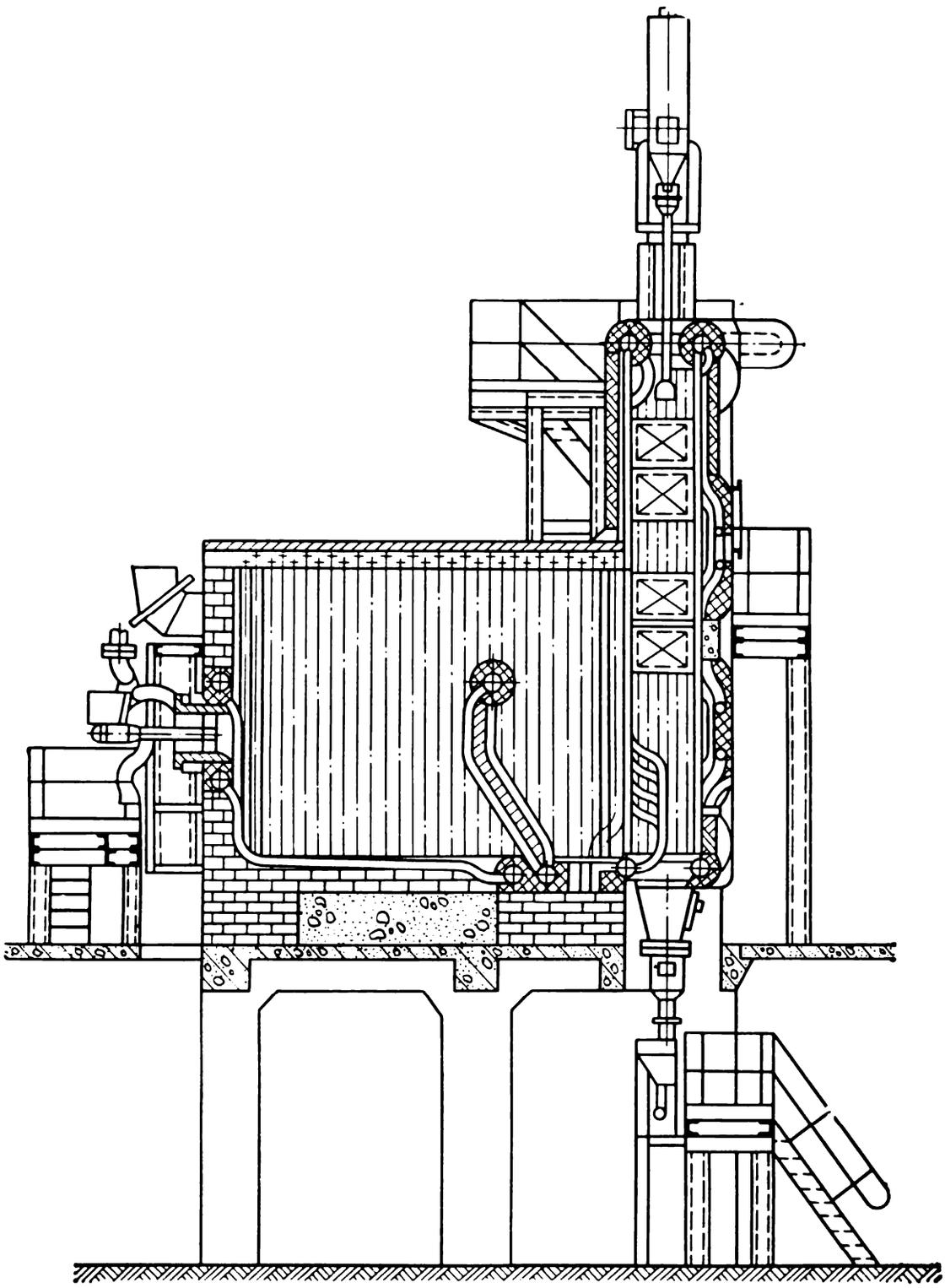

Fig. 86. Hot-water boiler КВГМ-10.

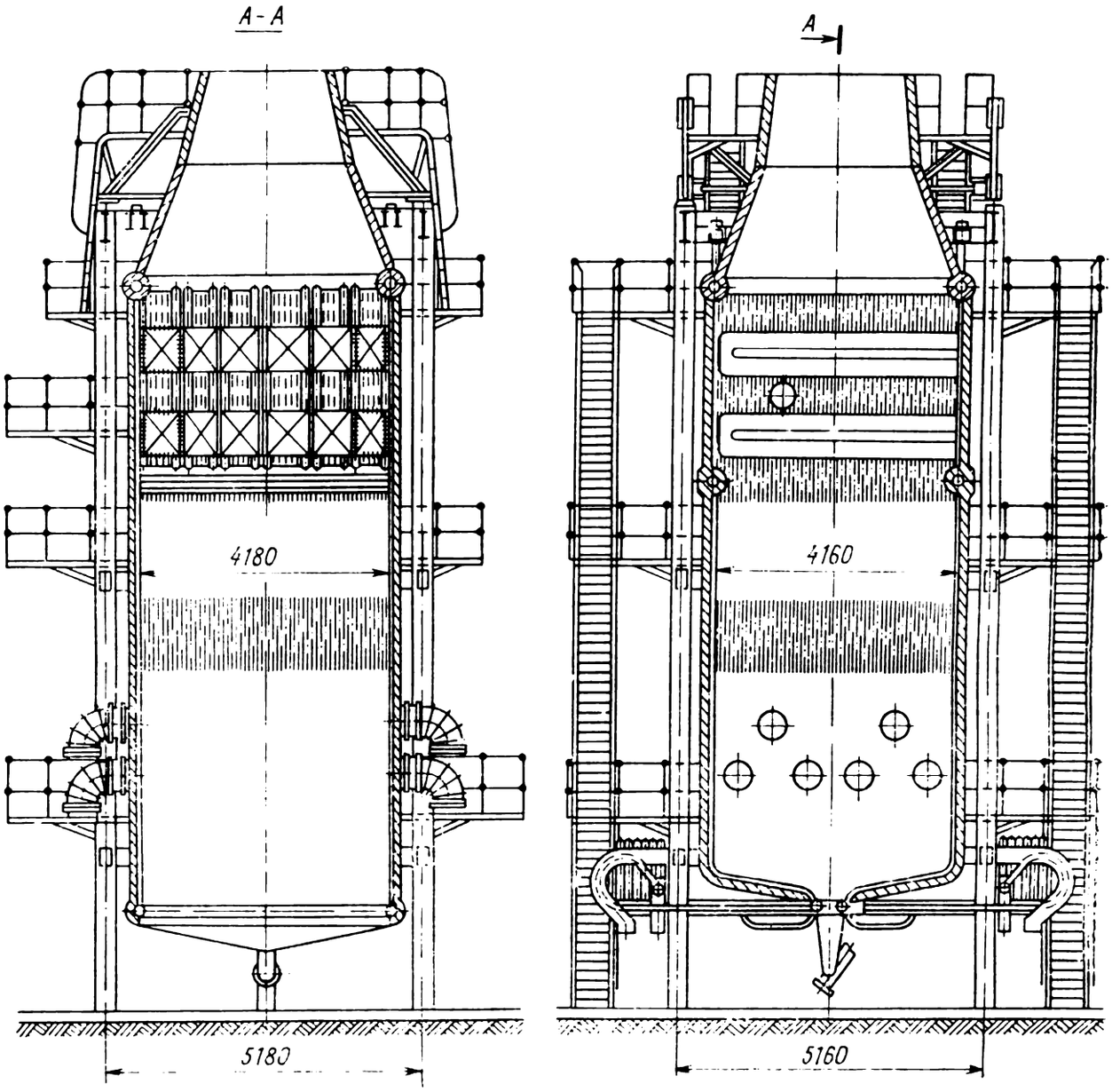

Fig. 87. Hot-water boiler ПТВМ-50.

Figure 84 shows how a cast iron steam generator can be connected to the heat-supply system.

Steel Hot-water Boilers. Steel boilers are employed when the cast iron boilers are unable to meet the consumer requirements concerning pressure or power. The following scale has been worked out (in MW) for heating power of hot-water boilers: 4.66, 7.55, 11.63, 23.26, 34.89, 58, 116.3, 210. Steel boilers are designed for operation using gas, fuel oil or solid fuel. For boilers with heating power up to 23 MW, water can be heated to 150°C, while in boilers having a thermal power of 35 MW or more, water can be heated up to 200 °C. The inlet pressures in these cases are 1.57 and 2.45 MPa respectively. Figure 85 shows a boiler employing solid fuel, while the boiler shown in Fig. 86 operates on gaseous and liquid fuel.

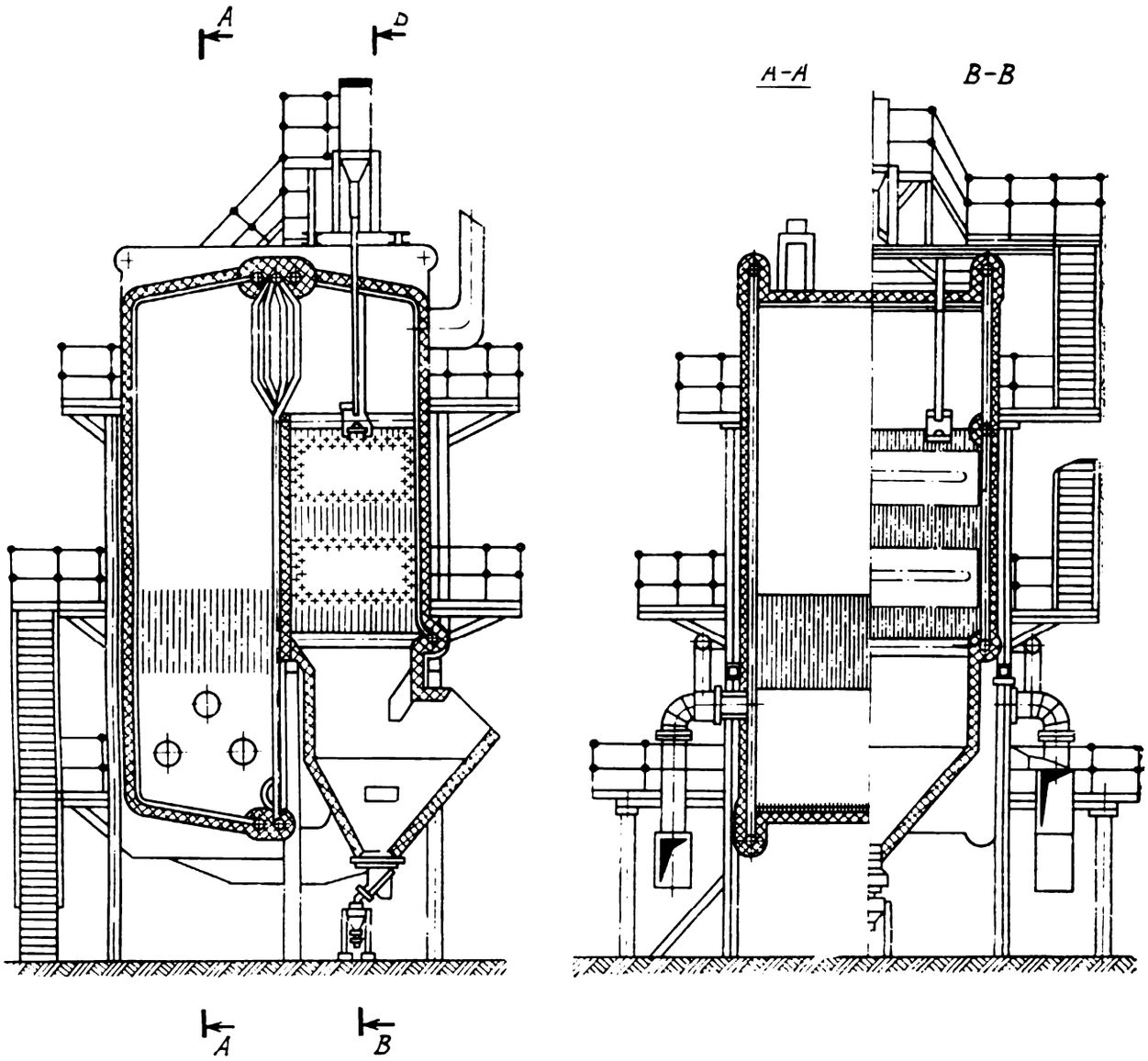

Fig. 88. Hot-water boiler ПТВМ-30М.

In central heating-and-power plants and in district heating units, peak-load gas-and-oil-fired hot-water boilers ПТВМ (Figs. 87, 88) are employed. Water is supplied to these boilers by pumps.

19.8. Steam-operated Hot-water Boilers

In modern boiler plants equipped with large-scale gas-and-oil-fired boilers, it is essential to use steam (for heating the fuel oil, deaeration of water and in circuits for chemical water treatment). In order to obtain steam, generators are additionally installed in the system. This inevitably complicates the thermal circuit and increases the running costs. Sometimes, it is possible to use steam-operated hot-water boilers, where steam at a pressure of 0.068-1.96 MPa is obtained in addition to hot water. Hybrid boilers, based on a combination of different hot-water boilers ПТВМ-30М and КВ-ГМ are used for this purpose. A distinguishing feature of steam-

and-water boilers is that a part of the water-wall heating surface is used for generating steam. The water-steam mixture from the pipes of steam generating surfaces in such boilers is supplied to the remote cyclone chambers. Water supply to the steam-generating part of hybrid boilers is maintained with the help of specially installed feeding pumps (operating at a steam pressure of over 1.0 MPa), or from the general pool of district-heating supply pumps (pressure line of district heat-supply line). The feed water for steam circuit must be of high purity.

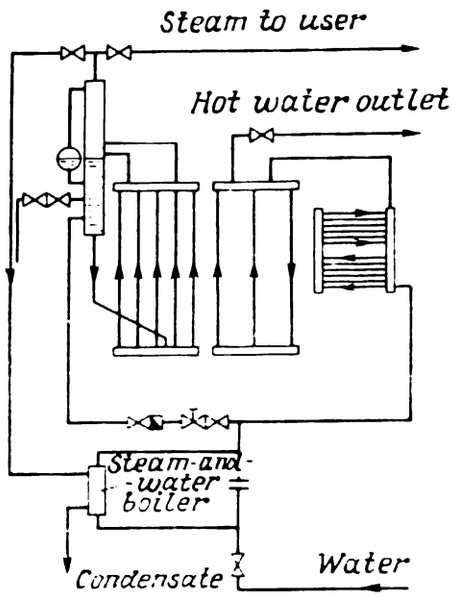

Fig. 89. Steam-and-water heating plant used on ПТВМ-30М.

Figure 89 shows the basic diagram for obtaining steam and hot water in a hybrid (steam-and-water heater) unit. After certain modifications, steam generators ДКВР can be used as steam-and-water heaters. For example, in the steam generator ДКВР-10 in-

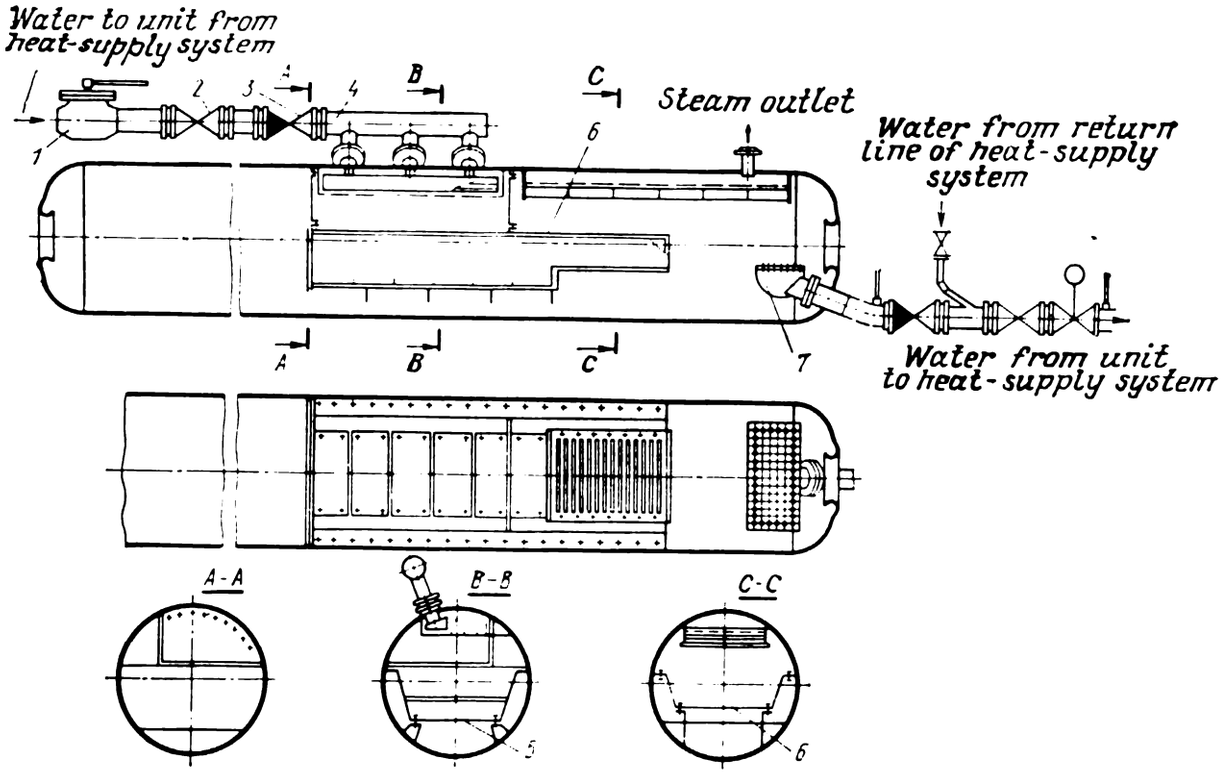

Fig. 90. Equipment of the drum of steam-and-water heater ДКВР-10.

tended for heating water in a heat-supply system, the design of the setup inside the drum has been changed (Fig. 90). Water from heat-supply system passes through regulating valve *1*, valve *2* and check

valve *3*. Water is distributed along the length of the drum with the help of collector *4* and, after passing through the still and distribution ducts, pours down into the main volume of the drum which is equipped with guide vanes *5* and perforated steam sprayer *6*. The water is deaerated during preheating and sparging by steam emerging from the water-wall tubes and steam-generating tubes. The gases released by the water are removed by the steam which leaves through the upper drum of the boiler. The boiler may have different ratings with respect to steam and hot water. The lowest steam-rating of a boiler is taken to be 2% of the rated value. The pressure of steam in the boiler drum depends on the pressure in the heat-supply system. The water heated in the boiler is removed through the intake *7*.

19.9. Contact Heaters

To heat water for production and domestic requirements in industry and public services, contact water heaters with a heating power up to 6.96 kW are used at present. In contact heaters, heat transfer between water and the combustion products takes place simultaneously with mass transfer. When combustion products give away their heat they are cooled down to the temperature of the water being supplied to the preheater. This is accompanied by the condensation of water vapour in the combustion products. Hence the efficiency of contact-type water heaters is determined from the high heat value. The efficiency of such heaters is 95-97% which is 10-12% higher than the value calculated from the low heat value of the fuel.

Contact heaters have the following advantages over hot-water boilers: high efficiency, simplicity in design, lower expenditure of metal (about 3-5 times) per unit heating power, reduced production area (by 4-6 times), high manoeuverability, and comparatively simple operation. Figure 91 shows a cascade-type contact water heater.

Gas is ignited in the furnace chamber. Cold water enters the lower part of the double-walled chamber body (water jacket *1*). From water jacket, water flows to upper disc *2* of the heater and flows down through the holes in the discs. The lower disc *5* has no holes and prevents the water from falling into the furnace chamber. Hot water in counter-current to the gases flows into annular receiver *6* and then on to the hot water tank.

Figure 92 shows a contact-surface water heater of packed type, operating on gas. Contact heating of water is supplemented by surface heating through the metallic walls of the furnace chamber. The contact chamber is filled with packing in the form of the Raschig rings. This type of design helps to reduce the dimensions of the

heater. Contact-type water heating systems may be additionally equipped with convective and radiative heating surfaces in the form of tubes in the furnace chamber. In this case, it is possible to

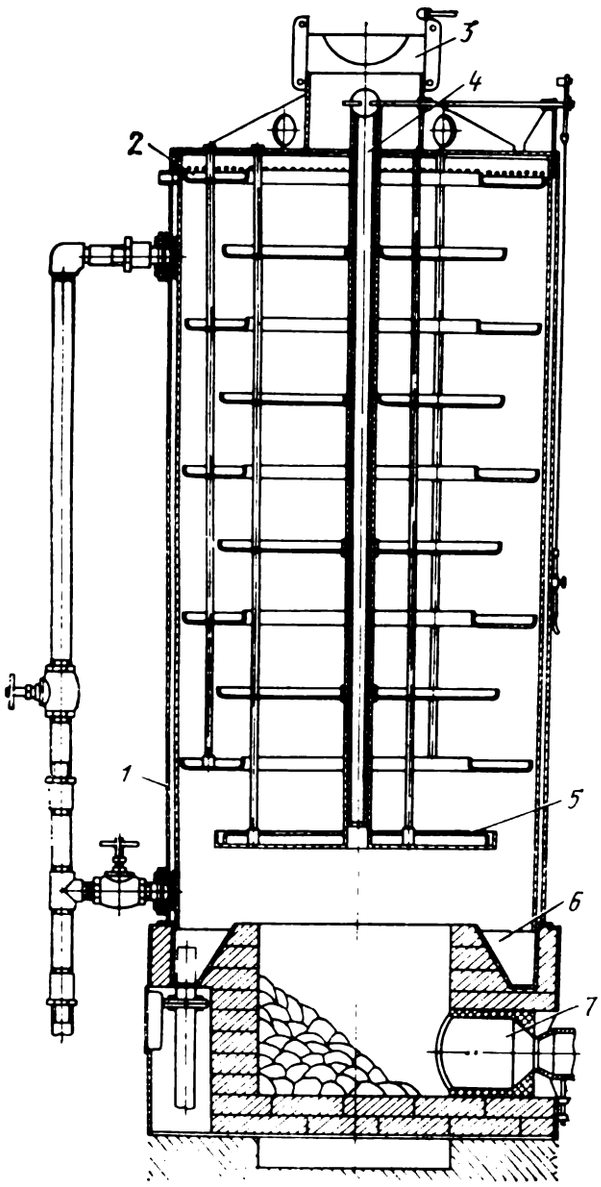

Fig. 91. Cascade-type contact water heater:

1—water jacket; *2*—upper disc; *3*—chimney; *4*—by-pass tube; *5*—lower disc; *6*—receiver; *7*—burner.

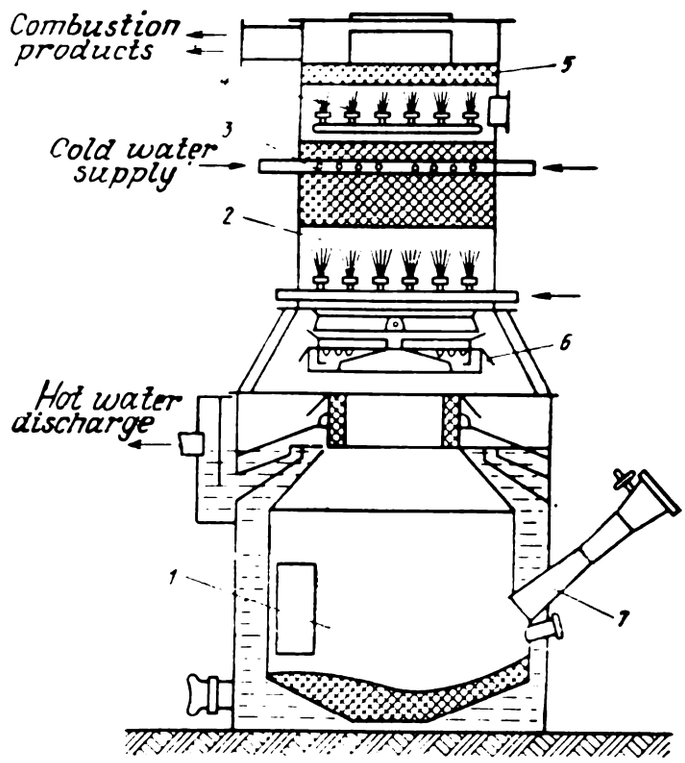

Fig. 92. Packed-type contact-surface water heater:

1—furnace chamber; *2*—Raschig ring packing; *3*—contact chamber; *4*—fuel nozzles; *5*—drop collector; *6*—over-furnace disc; *7*—gas burners.

obtain hot water at a temperature of 150-170 °C and steam at a pressure up to 0.68 MPa. A contact heater operating on gas and equipped with radiative heating surface is shown in Fig. 93.

It is found that the quality of water heated in contact-type heaters using gas as a fuel meets the sanitary and hygienic requirements and can be used for domestic purposes.

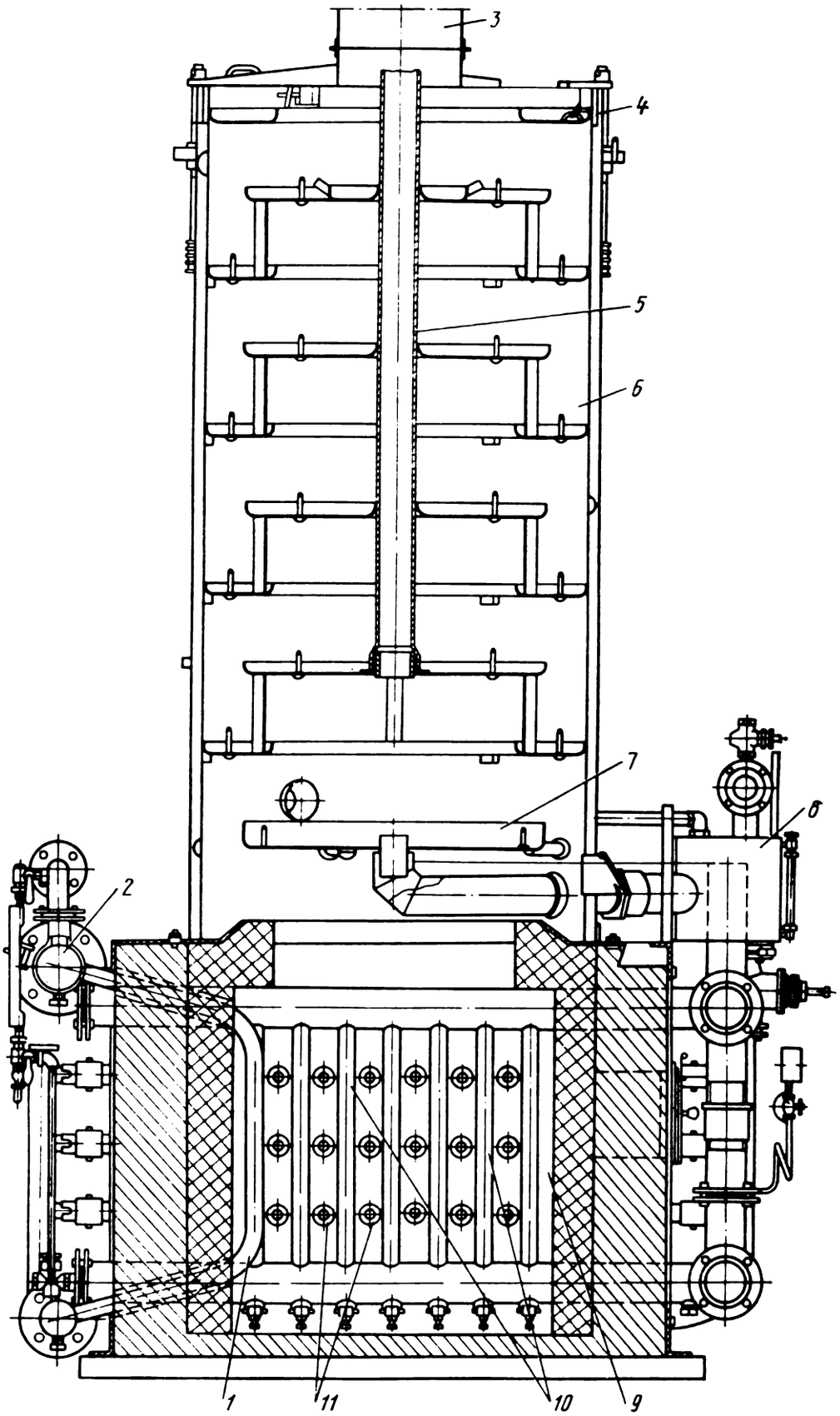

Fig. 93. Contact water heater with radiating heating surface:
1—steam-screen pipes; *2*—steam collector; *3*—chimney; *4*—water heater cover; *5*—by-pass pipe; *6*—contact chamber; *7*—lower disc; *8*—overflow tank; *9*—furnace chamber; *10*—radiative tubes of water screen; *11*—injection burners.

19.10. Electric Water Heaters and Steam Generators

Electric water heaters and steam generators may use either the electric resistance of heating elements or water (resistive-type boilers) or magnetic induction (inductive-type boilers). The first type of boilers are more frequently used. Resistive boilers are divided into two types: direct-action (electrode-type) boilers and indirect-action (with insulated heating elements) boilers. In electrode-type boilers,

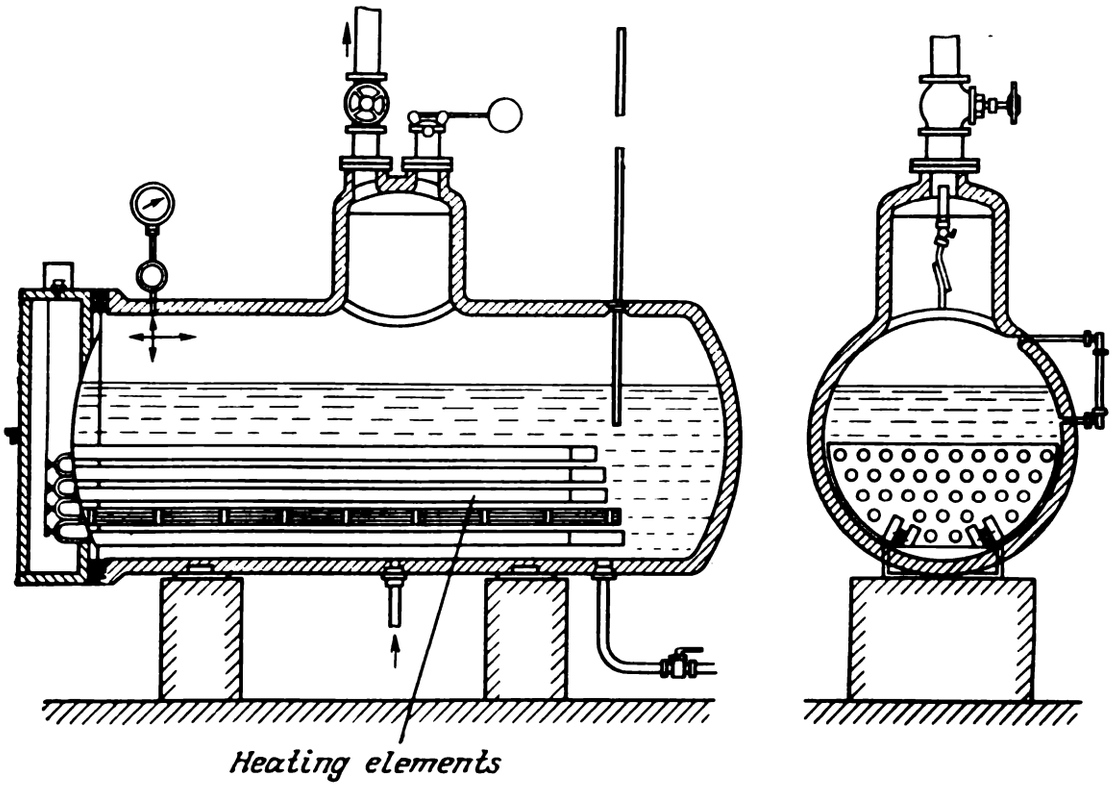

Fig. 94. High capacity water heater with thermoelectric elements.

heat is generated by passing current through electrodes immersed in water, the latter acting as the resistance. In the indirect-type boilers, water is heated by the walls of thermoelectric elements made in the form of spirals from wire or strip and placed in an insulated metallic case. Figure 94 shows a large-scale water heater with thermoelectric elements. Direct-action water heaters are shown in Fig. 95 (one-tank) and Fig. 96 (three-tank).

In a low-voltage one-tank water heater (see Fig. 95), electrodes *2* are made of steel tubes and are connected in two parallel groups. Electrodes are situated in tank *1* and are connected with the current-carrying rod *5*. The tank is closed by cover *4* having insulating washers *6* to which electrodes are fastened. Neutral electrode *3* is placed at the centre of the tank. Water is circulated with the help of branch pipes *7* and *8*.

In a three-tank water heater (see Fig. 96), working cylinders (tanks) *2* made of steel are connected through collectors *1* and *5*, and levelling pipes *6*. Water enters through the lower branch pipe of

a collector and leaves through the upper pipe. Electrodes *3* may be tubular or in the form of rods. Electrodes are introduced into the tank through insulating sleeves. Current is supplied in phase to the terminals of the electrodes.

Electric steam generators and water heaters are simple in design and can be made completely automatic. They have a high efficiency

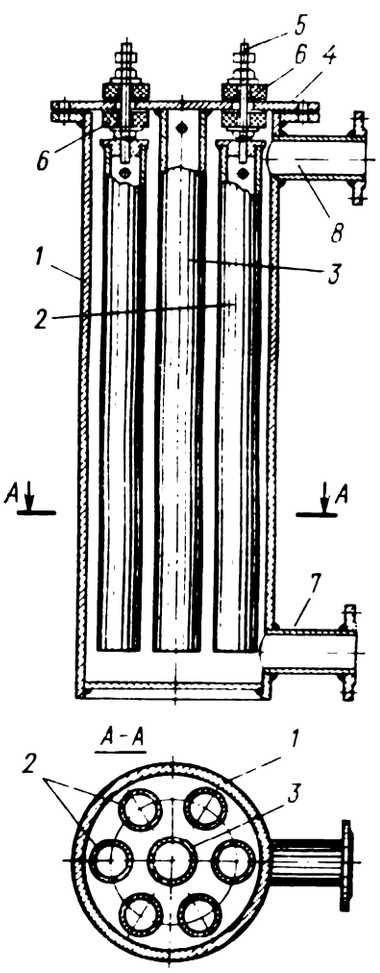

Fig. 95. Single-tank 150-kW water heater operating at 380 V:

1—tank; *2*—electrodes; *3*—neutral electrode; *4*—cover; *5*—current-carrying rod; *6*—insulating washers; *7*, *8*—branch pipes.

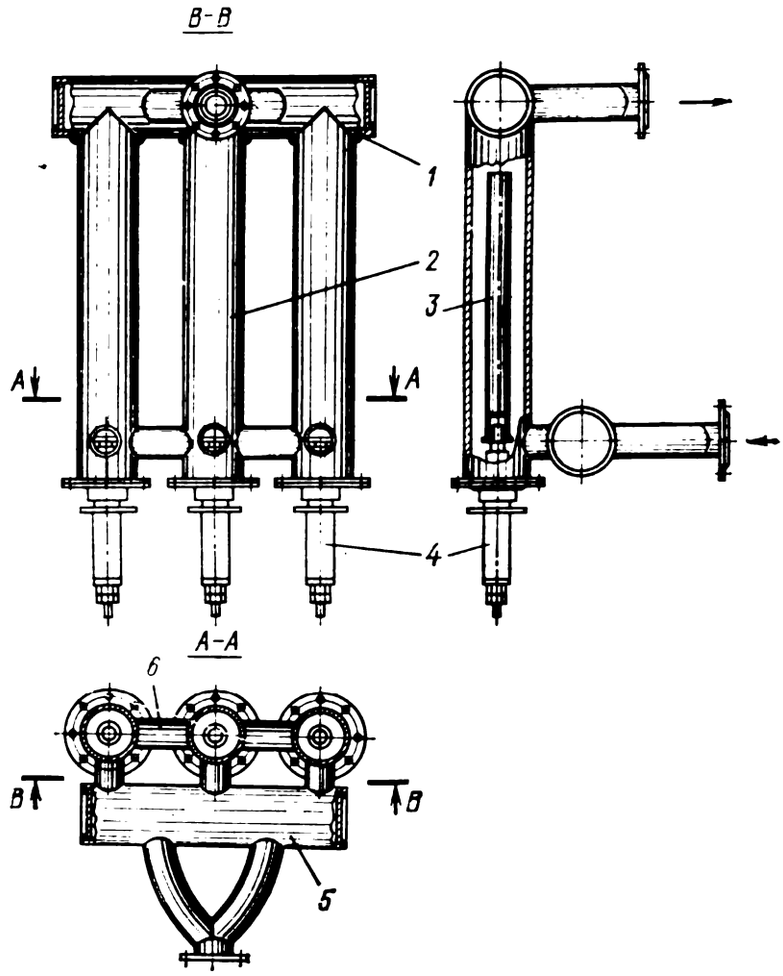

Fig. 96. Three-tank 5000-kW water heater operating at 6.3 kV:

1, *5*—collectors; *2*—tanks; *3*—electrodes; *4*—current-carrying rods; *6*—levelling pipe.

(92-99%) which is independent of the load. Electric steam generators are free from explosion risks and can be installed in a simple dry premises. An important advantage of electric water heaters and steam generators (especially for chemical industry) is the absence of smoke, dust and fly ash. The ultimate choice of the type of water heaters or steam generators is made after a technical and economical comparison of all the possible versions, since the cost of a unit of heat depends on the electric power charges.

Prospects for the Development of Furnace- and Boiler Engineering. The main directions for the growth of *boiler engineering* are: an increase in the single-unit power of boiler installations with a simultaneous increase in the parameters of steam (water), a decrease in the initial capital layout, an increase in efficiency and reliability.

The single-unit power can be raised by increasing the scale of consumption of steam (water) at plants (in district power supply units) and is attained not only by increasing the size, but also by introducing new designs which enable an intensification of furnace processes and heat transfer.

Cyclone preheating (with a liquid slag removal), water-wall with a two-sided illumination, convective beams from small-diameter tubes, etc. are widely used at present. The frameworks of large-scale steam generators are constructively linked to the building structure. An increase in the single-unit power of steam generators is accompanied by an increased efficiency and reliability, and by a decrease in the specific metal content. The reliability of operation is attained through modernization of the constructions, the use of high-quality materials and appropriate technology, as well as by perfecting the chemical treatment of water and water supply to the boilers, preventing slagging and ash deposition in furnaces and gas ducts of boilers, etc. In industrial heat engineering, special attention is paid to steam generators operating on waste gases of engineering plants, and to hybrid power-engineering installations.

Testing Questions

1. What is a boiler installation? What are the basic and auxiliary elements of a boiler unit?
2. Give the classification of boiler installations.
3. Describe layer- and chamber furnaces.
4. Which furnaces are designated as mechanical and semimechanical?
5. What are the advantages of cyclone furnaces over other types of furnaces?
6. What are the screens of a furnace chamber? What are they used for?
7. How are the heat flux of the furnace volume and grate determined?
8. Define the efficiency of a furnace.
9. What is the difference between steam generators with natural and forced circulation?
10. Which steam generators are called straight-through generators?
11. What is the purpose of a steam superheater? What are the types of steam superheaters?

12. What is an economizer? What is the difference between steaming and nonsteaming economizers?
13. What is the purpose of air preheaters? Describe different types of preheaters.
14. How is feed water for steam generators prepared?
15. Define the efficiency of a steam generator.
16. What is the difference between steam generators operating on waste gases of industrial plants (GWG) and power-plant steam generators? Describe different types of GWG.
17. For what purpose are hot-water boilers used and how are they classified?
18. What is the difference between contact water heaters and cast iron hot-water boilers?
19. What are the main advantages of electric hot-water and steam generating boilers?
20. Characterize the main prospects of the development of boiler engineering at the present stage.

Chapter Twenty

STEAM POWER PLANTS

20.1. Basic Concepts. Steam Power Plant Cycles

About one-third of fuel utilized in the USSR is spent for the production of thermal and electric energy. The development of national economy facilitates an increasing consumption of electric energy. It should be noted that nearly 80% of electric energy is produced in thermal power stations. The main type of such stations is the steam-turbine power plant. The working fluid in steam turbines is steam. The possibility of the utilization of steam for obtaining power was known more than 2000 years back, but industrial employment of steam power engines was started only in the eighteenth century. In 1711, Newcomen constructed a one-cylinder steam engine of batch operation for hoisting water. The power of first engines was about 6 kW and their efficiency ranged from 0.5 to 1%. The first industrial continuous-operation steam engine was constructed in 1765 by Russian inventor I.I. Polzunov. Its power was about 30 kW. The engine was used for driving blowers of blast furnaces. In 1784, J. Watt constructed a double-acting steam engine. At the beginning of the nineteenth century, steam engines were mounted on steam-ships and locomotives. The first steam turbine was constructed at the end of that century.

A steam power plant schematically shown in Fig. 97 consists of steam generator *1* with a steam superheater, steam turbine *2* with condenser *3*, electric generator *4* and feed pump *5*. The working fluid is steam. Superheated steam is fed to the turbine; in the turbine, the steam expands and performs a useful work as the rotor of the turbine is set in motion. The mechanical energy is transmitted with the help of a coupling to the rotor of the generator in which it is converted into electrical energy. The waste steam from the turbine is delivered to the condenser. The feed pump delivers the condensate to the steam generator. If we assume that saturated steam is the working fluid, we can realize a Carnot cycle which allows us to attain the maximum efficiency in a given temperature interval (T_1, T_2). Let us consider the cycles represented on the *p-v* diagram (Fig. 98) and *T-s* diagram (Fig. 99). The curve *A-K-B* in these diagrams is the boundary curve. Segment *4-1* corresponds to

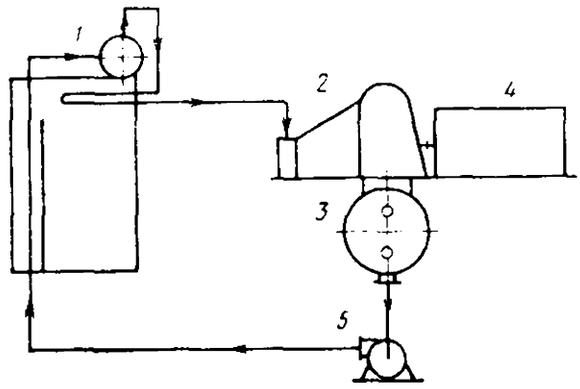

Fig. 97. Schematic diagram of steam power plant.

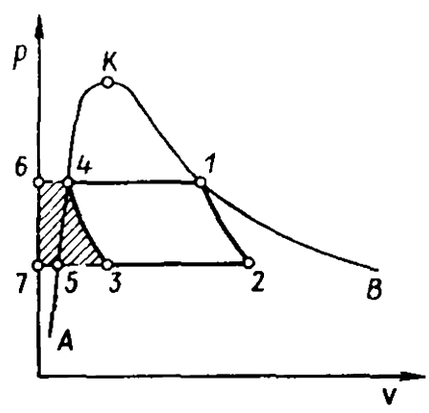

Fig. 98. Carnot cycle represented in the *p-v* coordinates.

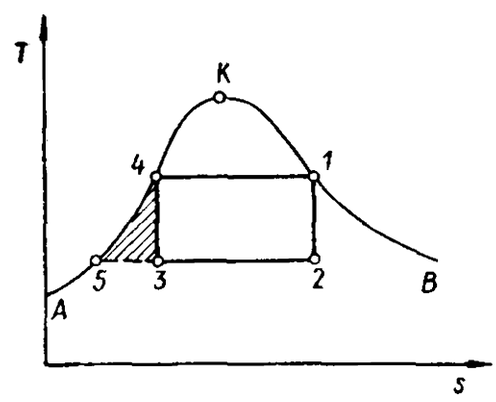

Fig. 99. Carnot cycle in the *T-s* coordinates.

the process of the supply of heat q_1 (water is evaporated in a boiler for obtaining dry saturated steam) under a pressure p = const. Until all the water is evaporated, its temperature remains constant at the value T_1. Therefore, isobar *4-1* is at the same time an isotherm. Process *1-2* corresponds to adiabatic expansion of steam in the turbine. (Curve *1-2* is an adiabat.) The steam passing through the turbine is delivered to the condenser. The heat q_2 is removed from steam at p_2 = const and T_2 = const. Line *2-3* is simultaneously an isobar and an isotherm. Process *3-4* corresponds to compression. Point *3* is chosen in such a way that the compression occurs along an adiabat.

Thus, cycle *1-2-3-4-1* consists of two isotherms (curves *4-1* and *2-3*) and two adiabats (curves *1-2* and *3-4*), i.e. it is a Carnot cycle. However, in actual practice the Carnot cycle cannot be realized since at point *3* (the beginning of adiabatic compression), the specific volume of wet steam under pressure p_2 and temperature T_2 is so large that considerable amount of work is required to compress it in a large-scale compressor. This work is numerically equal to the area $F_{4-3-7-6-4}$. In this case, the actual useful work is less than the theoretical value. In order to reduce work expenditures for compression, waste steam should be completely condensed before compression (the process of heat removal should be continued to point *5*). Then only water will be compressed. But since water is practically incompressible, the work $(p_1 - p_2)\, v_5$ will be spent only for pushing water. Obviously, the specific volume of water at point *5* is small in comparison with the specific volume of steam at point *3*. Consequently, the work of pushing water is small. Steam power plant operates on the basis of the Rankine cycle, viz. the cycle involving complete condensation of waste steam. The efficiency of the Rankine cycle is lower than that of the Carnot cycle. The efficiency can be increased by using superheated steam. The schematic diagram of a steam power plant operating on the basis of the Rankine cycle is shown in Fig. 100. Dry saturated steam obtained in boiler *1* passes through steam superheater *5* at pressure p_1, temperature t_1, and enthalpy i_1 and enters turbine *2*. In the turbine, steam adiabatically expands to pressure p_2 and enthalpy i_2 and is sent to condenser *3*. Figures 101 and 102 represent a Rankine cycle for superheated steam in the *p-v* and *T-s* coordinates. Point *1* on the diagram corresponds to the state of superheated steam with parameters p_1, t_1, and i_1. Expansion in the turbine corresponds to adiabat *1-2*. At the end of expansion, the enthalpy of steam drops to i_2. Isobar *2-2'* corresponds to steam condensation in the condenser. The condensate having enthalpy i_2 is delivered from the condenser to the steam generator. Since the change in the volume of water during compression is negligibly small, we may assume that compression from p_2 to p_1 (pushing water into the boiler) occurs at a constant volume (v_2 = const) along isochore *2'-3*. Considering the work spent for pushing through, the temperature of water behind the pump assumes the

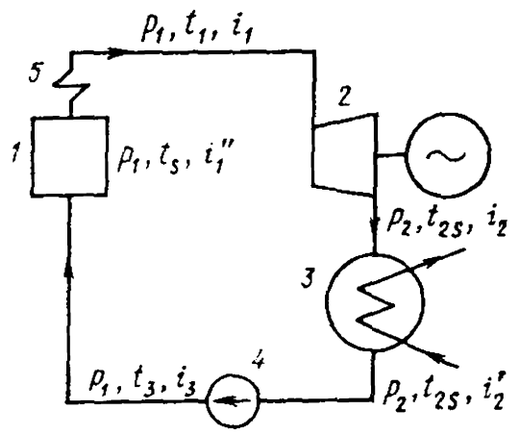

Fig. 100. Schematic diagram of a steam power plant operating on superheated steam:
1—boiler; *2*—turbine; *3*—condenser; *4*—pump; *5*—steam superheater.

value t_3. The segment of isobar *3-4* corresponds to heating water in the boiler from t_3 to the boiling point corresponding to p_1, the segment of isobar (isotherm) *4-5* to the formation of saturated steam, and segment *5-1* to steam superheating in the steam generator. Thus, the heat q_1 received from the source is equal to $(i_1 - i_3)$ or, taking into

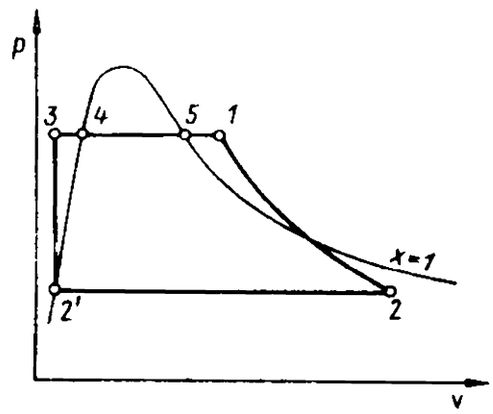

Fig. 101. Rankine cycle with superheated steam in the *p-v* coordinates.

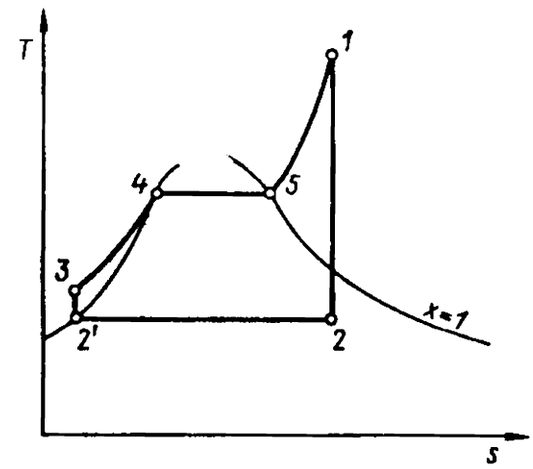

Fig. 102. Rankine cycle with superheated steam in the *T-s* coordinates.

account the work $(i_3 - i_2')$ spent for compressing water in the pump, $q_1 = (i_1 - i_2') - (i_3 - i_2')$. The heat removed is given by $q_2 = i_2 - i_2'$. The efficiency of the Rankine cycle is

$$\eta_t = \frac{q_1 - q_2}{q_1} = [(i_1 - i_2') - (i_3 - i_2') - (i_2 - i_2')/[(i_1 - i_2') - (i_3 - i_2')]. \quad (20.1)$$

The work by the pump is small in comparison with the heat supplied to the cycle. Disregarding the work spent for compressing water in the pump, we obtain the following expression for the thermal efficiency of the Rankine cycle:

$$\eta_t = (i_1 - i_2)/(i_1 - i_2'). \quad (20.2)$$

Since all isobars on the *T-s* diagram are close to each other and to the boundary curve for liquid, the area $F_{2'-3-4-2'}$ is small and can be replaced by the straight line *2'-(3)4* on the *p-v* diagram (Fig. 103) and curve *2'(3)-4* on the *T-s* diagram (Fig. 104) for a real cycle. The theoretical flow rate for steam in a steam power plant is $d_{\text{theor}} = 1/(i_1 - i_2)$. The specific heat flow is equal to the product of the steam flow rate d_{theor} by the amount of heat spent in the steam power plant for obtaining 1 kg of dry steam, $q_{1\,\text{theor}} = i_1 - i_2'$:

$$q_{\text{sp.theor}} = d_{\text{theor}} d_{1\,\text{theor}}. \quad (20.3)$$

This gives

$$q_{sp.theor} = 1/\eta_t.$$

If the amount of heat is measured in kilocalories and work in kW·hr the formulas for the steam flow rate and the specific heat flow become

$$d_{theor} = 860/(i_1 - i_2); \quad q_{sp.theor} = 860/\eta_t,$$

where 860 is the thermal equivalent of 1 kW·hr.

The thermal efficiency of a steam power unit for known values of the initial and final parameters can be determined with the help of

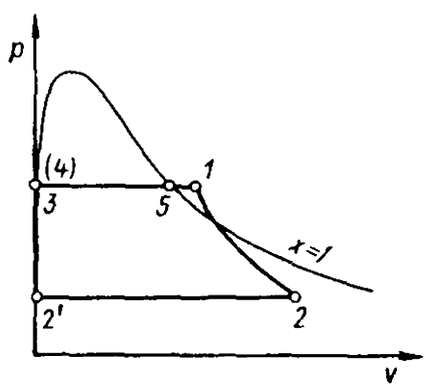

Fig. 103. Simplified p-v diagram of a Rankine cycle.

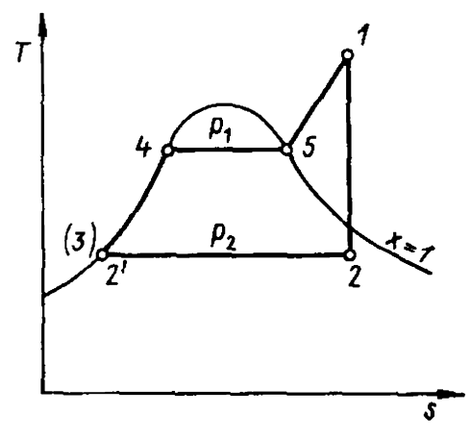

Fig. 104. Simplified T-s diagram of a Rankine cycle.

the i-s diagram (Fig. 105). For this purpose, we must find the point of intersection of the isobar p_1 with the isotherm t_1, corresponding to the initial parameters (point *1*), project this point onto the vertical axis and find the value of i_1. Then we must draw an adiabat through point *1* ($\Delta s = 0$) until it intersects isobar p_2 corresponding to the final pressure (point *2*). The projection of point *2* onto the vertical axis corresponds to the steam enthalpy i_2 at the end of expansion. In order to determine the enthalpy of the condensate under the pressure corresponding to the end of expansion, we must rise along the isobar p_2 (which is at the same time the isotherm t_2) until it intersects the boundary curve $x = 1$ and obtain the value t_2 on the isotherm. The enthalpy of 1 kg of the condensate is $i_2' = 1 t_2 c_w$, where c_w is the specific heat for water. If we substitute the value of c_w in kJ/(kg·K), we obtain i_2' in kJ/kg.

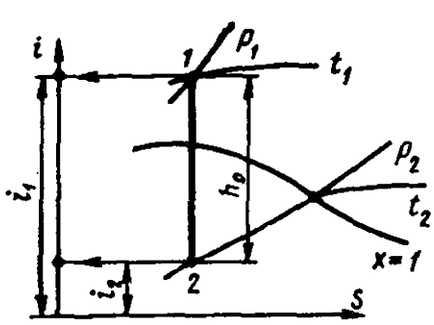

Fig. 105. To the calculation of the enthalpy of steam and condensate (Rankine cycle).

20.2. Methods of Increasing the Economic Efficiency of Steam Power Plant

The economic efficiency of a steam power plant is estimated by the thermal efficiency of the cycle (η_t). It follows from the analysis of the formula for η_t that the thermal efficiency is the higher the larger the available heat drop $(i_1 - i_2) = h_0$. In order to increase the available heat drop, the initial parameters (p_1, t_1) of steam should be increased while the pressure p_2 at the end of expansion should be decreased. Figure 106 shows a cycle of a steam power plant in the

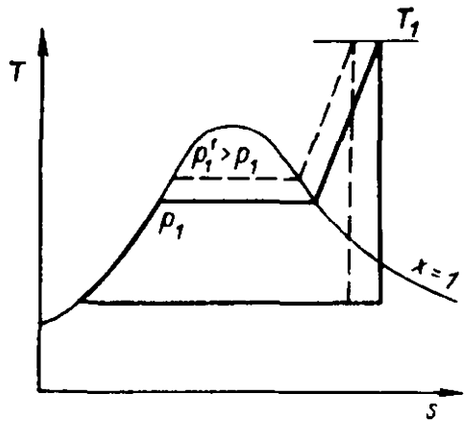

Fig. 106. *T-s* diagrams of a steam power plant cycle for different initial pressures.

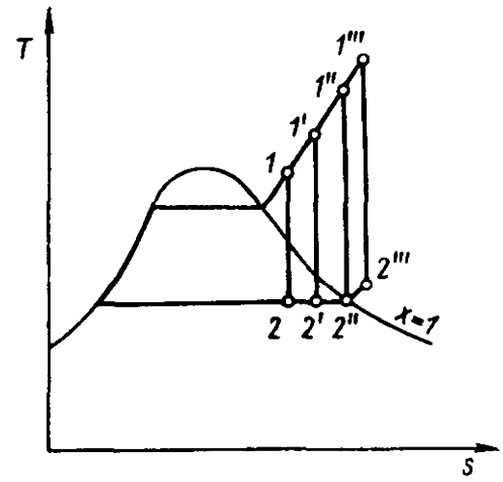

Fig. 107. *T-s* diagrams of a steam power plant cycle for different initial temperatures.

T-s coordinates for different values of the initial pressure. The higher the pressure p_1, the higher the mean temperature of heat supply, and hence the higher η_t, since for any cycle $\eta_t = 1 - T_2^{mean}/T^{mean}$. The mean temperature of the cycle increases with the initial temperature t_1 (Fig. 107). The strongest effect can be obtained by simultaneously increasing p_1 and t_1 (Fig. 108). This explains the utilization of steam power units operating with high values of the initial parameters. The values of initial parameters p_1 and t_1 are determined by the properties of the metal from which the parts of the unit are made. Figure 109 illustrates the effect of the value of the terminal steam pressure on the commercial efficiency of a cycle. The lower p_2, the lower T_2^{mean}, and hence the higher η_t.

The magnitude of the final pressure is determined from the comparison of expenditures for maintaining p_2 and saving the power due to a possible decrease in p_2. In real units, $p_2 = 4$ to 3.5 kPa. An increase in the initial pressure p_1 and a drop in the final pressure p_2 simultaneously with increasing the available heat drop (h_0) leads to an increase in the moisture content of steam at the end of expansion (Fig. 108). The final moisture content in real steam leaving a turbine should not exceed 12%. For higher values of moisture

content, the efficiency of the turbine becomes lower, and the mechanical wear (erosion) of blades by water drops increases. Intermediate superheating of steam can be used to maintain the moisture content

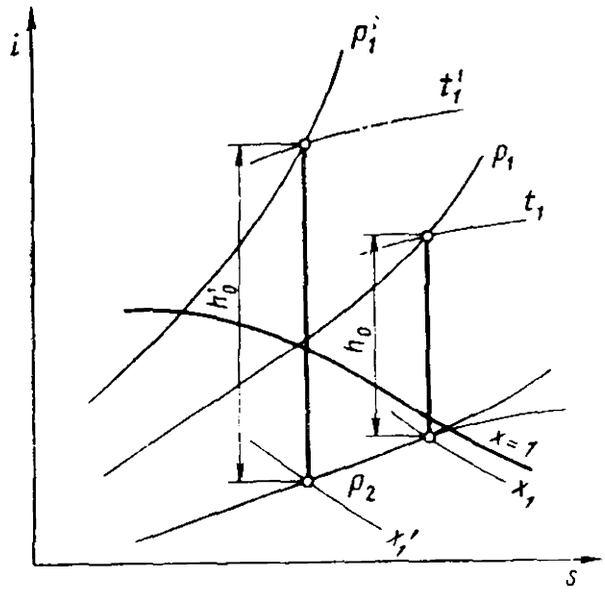

Fig. 108. The influence of the initial parameters of steam on the available heat drop.

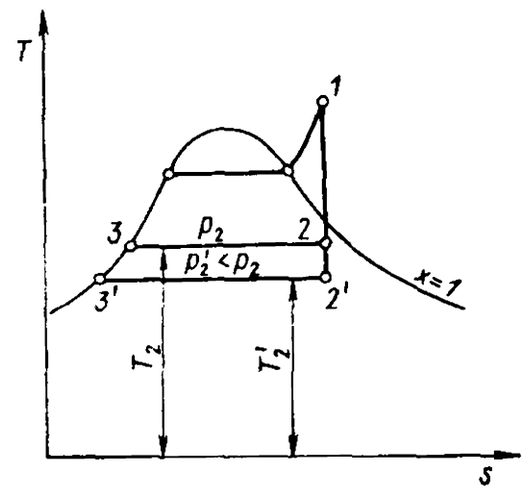

Fig. 109. The influence of the final pressure on the commercial efficiency of a steam power plant.

of steam at the admissible level for increased values of the initial parameters. Steam power plants with intermediate gas superheating (Fig. 110) gained the widest application. Steam is supplied to the

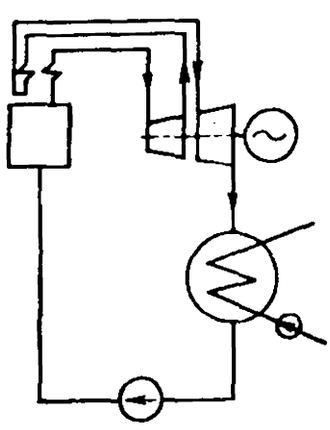

Fig. 110. Schematic diagram of a unit with intermediate steam superheating.

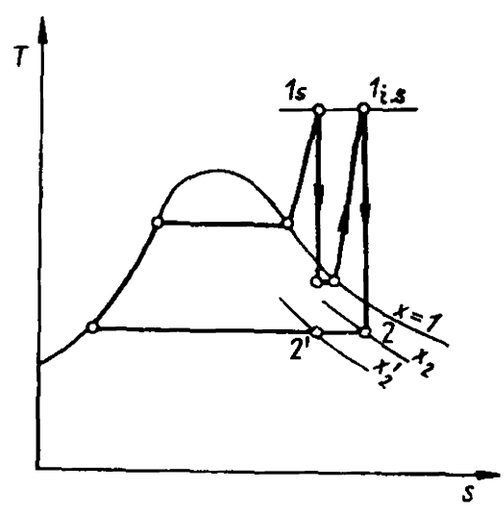

Fig. 111. *T-s* diagram of a steam power plant cycle with intermediate steam superheating.

intermediate steam superheater after it passes through a high-pressure cylinder. Under the pressure $p_{1.s}$ of intermediate superheating of about 0.2 p_1, the steam temperature is raised to the initial level ($t_{1.s} = t_1$). After intermediate superheating, steam enters the low-pressure cylinder of the turbine. Intermediate superheating of

steam leads to a decrease in the final moisture content and simultaneously increases the available heat drop, thus increasing the commercial efficiency of the unit (Fig. 111).

20.3. Fundamentals of Power-and-heat Supply

In a condensation-type steam power plant (see Fig. 100), the steam waste from the turbine enters the condenser where the entire amount of heat liberated in condensation of steam by cooling water is removed to the ambient and irrevocably lost. Only 30-40% of heat supplied with a fuel are converted into useful work. At the same time,

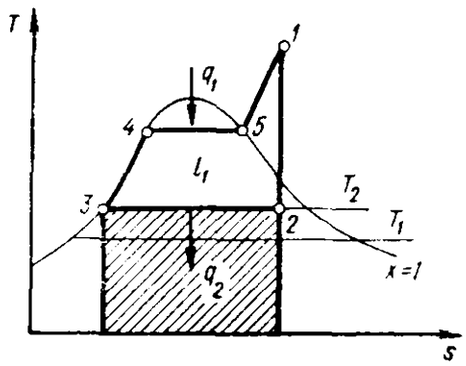

Fig. 112. *T-s* diagram of a steam power-and-heat plant cycle;

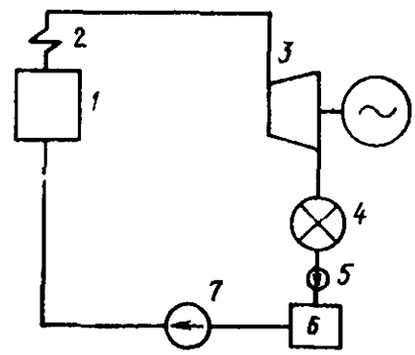

Fig. 113. Schematic diagram of a steam power-and-heat plant:
1—steam generator; *2*—steam superheater; *3*—turbine; *4*—load; *5*—condensate pump; *6*—feed tank; *7*—feed pump.

heat energy is also required in addition to electrical energy in the region of power supply. Condensate has the temperature of 26-29°C under the pressure of 4-3.5 kPa in the condenser and hence is not used in heat supply. Therefore, extra fuel must be burnt in industrial and heating boiler units to supply hot water to the district. In order to be able to utilize the heat of waste steam, its temperature should be increased, and hence p_2 should be elevated (Fig. 112). In this case, the useful work of a cycle decreases, but the heat of waste steam is utilized for satisfying heat demand of the region. This reduces fuel expenditures in boiler units. Such a combined production of electric and thermal energy in electric power plants is called *power-and-heat supply*, and electric power plants producing electric and thermal energy on the basis of a combined cycle are called *thermoelectric plants* (Fig. 113). Steam from superheater *2* is sent to turbine *3* and then to load *4*. After that the condensate goes to feed tank *6* and then to steam generator *1* with the help of pump *7*. Not only the waste steam from the turbine but also the steam extracted from intermediate stages of the turbine operation is used for heat supply system of a thermoelectric plant.

Regeneration Cycle. The principle of combined utilization of the heat of combustion for the production of electric and thermal energies can be also used in the operation of condensers. For this purpose, steam from intermediate stages of steam extraction can be used for heating feed water (condensate) supplied to the steam generator. In this case, the steam power plant is a heat consumer. The heating of feed water by the steam extracted from turbines at intermediate stages is called *regenerative heating*. Regenerative heating of feed water leads to an increase in the mean inlet temperature of the heat-transfer agent and thus increases the thermal efficiency of the cycle. The thermal cycle of a steam power plant with heat regeneration is depicted in Fig. 114. The heating of feed water on the segment *3-4* is realized at the expense of heat taken off at the stages of steam extraction from a turbine (segment *6-2*). It is assumed that the segment of steam expansion corresponding to curve *6-2* is equidistant to the segment of curve *3-4*. Heat exchangers of shell-and-tube and direct contact types (where heat- and mass-transfer occurs simultaneously) are used for heating feed water in the systems with regenerative heating.

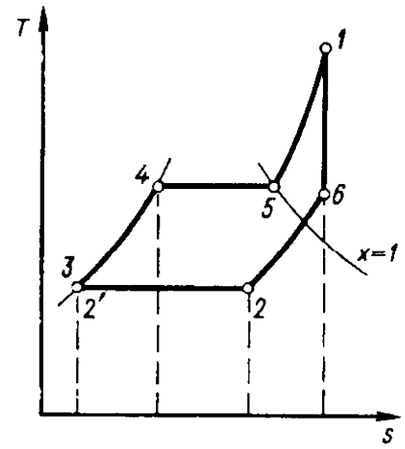

Fig. 114. Regenerative feed water heating cycle in the *T-s* coordinates.

20.4. The Principle of Operation of a Steam Turbine

Steam turbine is a heat engine used for the conversion of the potential energy of steam into mechanical energy. The simple steam turbine (Fig. 115) consists of shell *5* and a rotor (Fig. 116) including shaft *1*, disc *2*, rotor blades *3* and several nozzles *4*. Steam passes through the nozzles, where it acquires a high speed and is directed to the rotor blades of the turbine. In the nozzles, the potential energy of steam flow is partially converted into kinetic energy. As the steam flow passes through a curved channel formed by the rotor blades, centrifugal forces emerging in the flow set the rotor of the turbine in motion. Thus, the kinetic energy of the flow is partially converted into mechanical energy on the rotor blades.

Depending on the operational principle, steam engines can be divided into impulse and reaction turbines. In impulse turbines, the steam pressure drops (is lowered) from p_1 to p_2, and the absolute velocity of the flow increases from c_0 to c_1 only in the nozzles (see Fig. 115). In the passage between the blades, the steam pressure

remains unchanged. The turbines in which the steam pressure varies in the nozzles and between the blades (Fig. 117) are called *reaction turbines*. The variation of the steam pressure and velocity is due to a change in the flow area of the blade passage. In *impulse turbines*,

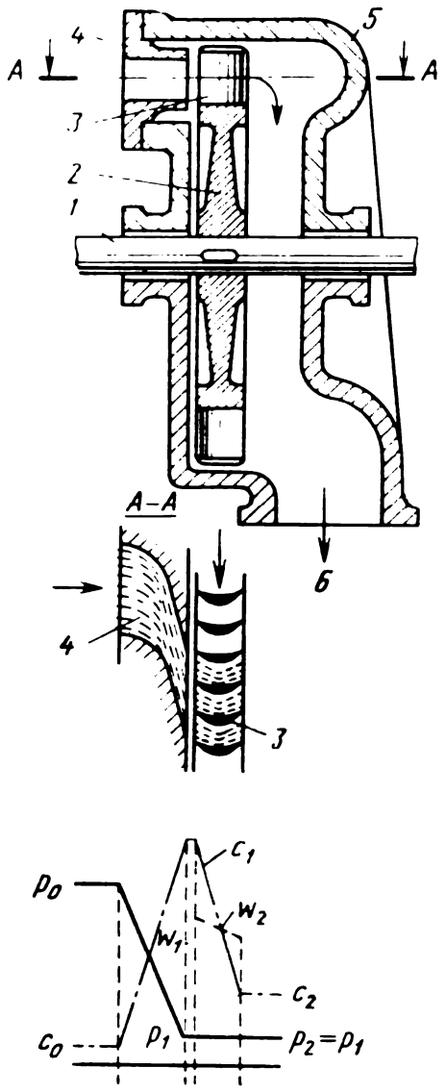

Fig. 115. Schematic diagram of an impulse turbine:
1—shaft; *2*—disc; *3*—rotor blades; *4*—nozzles; *5*—shell; *6*—outlet pipe.

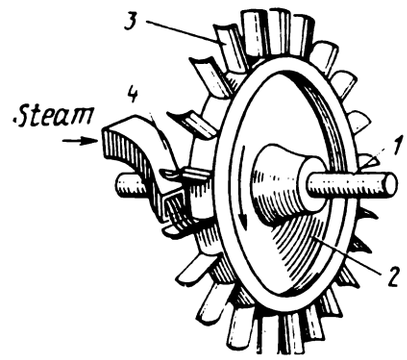

Fig. 116. One-crown turbine rotor:
1—shaft; *2*—disc; *3*—blades; *4*—nozzle.

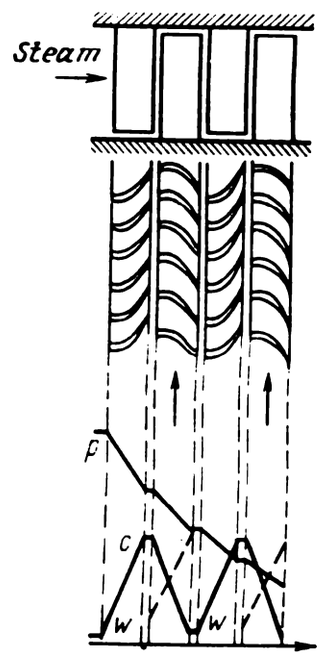

Fig. 117. Flow-through part of a multi-stage reaction turbine.

the blade passage cross section does not change. After a single expansion in the nozzles (under high pressure drops), the inlet steam velocity on the blade is such that with a single row of blades, the circumferential velocities of the turbine wheel exceed the admissible limit. The relative velocity of the steam jet at the blade entrance is $w_1 = c_1 - u$, where c_1 is the absolute velocity of steam and u is the circumferential velocity of a blade. The absolute velocity of steam at the blade exit is $c_2 = w_2 - u$, where w_2 is the relative outlet velocity of steam, or $c_2 = c_1 - 2u$. It is well known that the kinetic energy of steam is utilized more completely when $c_2 = 0$.

Under this condition, $u = 0.5c_1$, i.e. the circumferential velocity of a blade is $u = 0.5c_1$. Practically, the steam enters a blade at an angle $\alpha = 12\text{-}14°$, and the optimal ratio $u/c = 0.45\text{-}0.48$. If we know u, the rotational velocity of the turbine spindle is determined

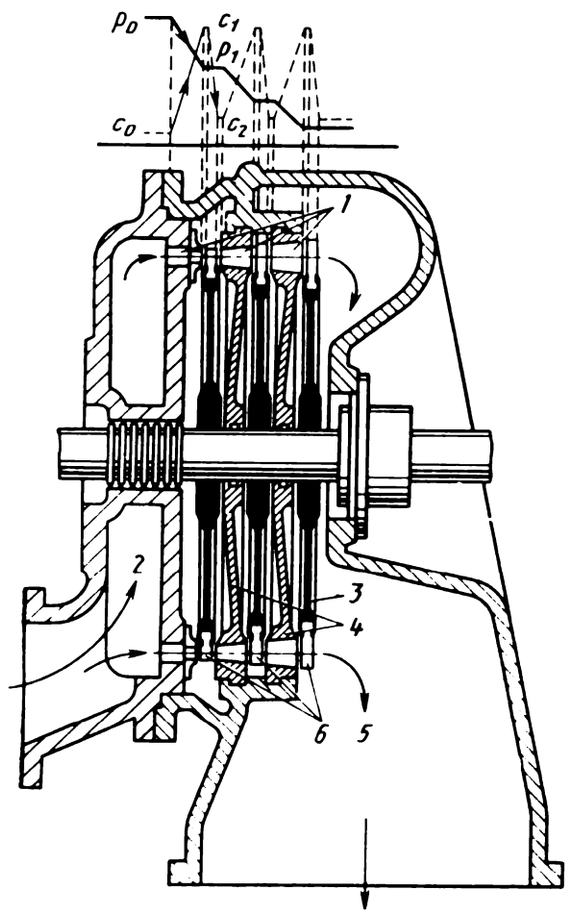

Fig. 118. Three-pressure-stage reaction turbine:
1—nozzles; *2*—annular chamber; *3*—disc; *4*—diaphragms; *5*—outlet pipe; *6*—rotor blades.

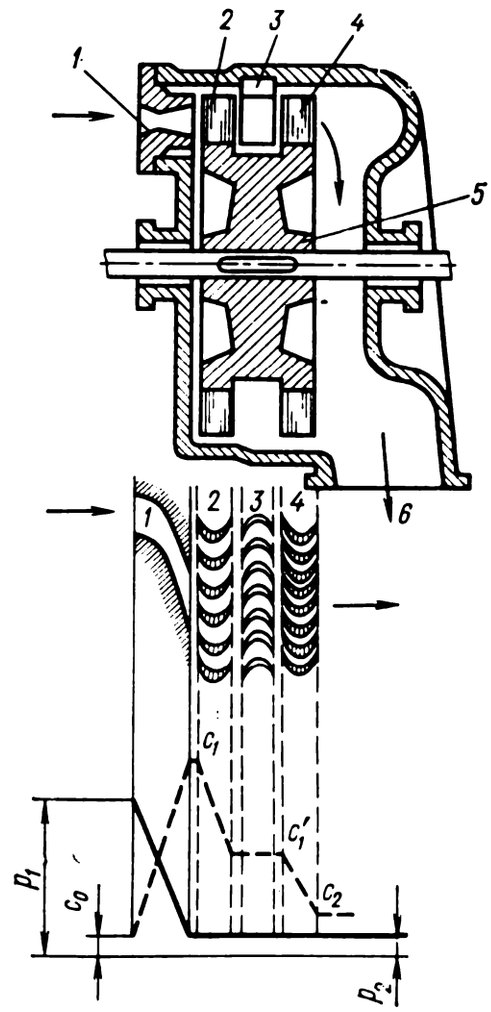

Fig. 119. Impulse turbine with velocity stages:
1—nozzle; *2*, *4*—rotor blades; *3*—directing blades; *5*—disc; *6*—outlet pipe.

by the formula $n = 60u/\pi d$, where d is the mean diameter of the rotor wheel (m). For the turbine-driven generators, $n = 3000$ rpm.

One of the ways to utilize considerable pressure drops in steam (from the initial pressure p_0 to the terminal pressure p_t) is the employment of a multi-stage turbine. Such turbines consist of several consecutive one-stage turbines with the same spindle (Fig. 118). The turbine casing (cylinder) is divided by partitions called *diaphragms* into three compartments. Each compartment contains one rotor wheel. Steam may pass from one compartment to another only through the nozzles on the diaphragm circumference. Since $c = 44.8\sqrt{i_1 - i_2}$, for z pressure stages the flow velocity in each

stage is smaller than that for a one-stage turbine by a factor of $\sqrt{z}$. For the same mean diameter d_m of rotor wheels and for $u/c = 0.5$, the circumferential velocity will decrease to $1/\sqrt{z}$ part of its value for the one-stage turbine.

The other method of utilization of large pressure drops of steam at a moderate rotational velocity of spindle is the employment of velocity stage-impulse turbines. Figure 119 represents a schematic cross section of an impulse turbine with two velocity stages. Passing through nozzle *1*, steam under pressure p_0 expands to the terminal pressure p_2, acquiring a velocity c_1. Steam from the nozzle meets the first row of blades *2* (there are two rows of blades on the disc) and gives off a part of its kinetic energy. In this case, the steam velocity drops to c_1', but it is still quite high. After the first row of blades, steam meets directing blades *3*, changes the direction of its motion and enters the second row of blades *4* with velocity c_1'.

In this row, steam gives off the rest of its energy and leaves the blades at velocity c_2. With two velocity stages, the circumferential velocity may amount to half its value for a one-stage turbine with the same pressure drop p_1-p_2.

Usually, the flow area of a turbine consists of a disc with velocity stages (the Curtis disc) and several pressure stages. The ratio u/c for reaction turbines varies from 0.8 to 0.94. The circumferential speed of the rotor wheel in this case is twice as high as that for impulse turbines. For this reason, reaction turbines are always of the multiple-runner type (with several pressure stages).

Steam-jet Nozzle. The theoretical value of steam velocity at the nozzle exit is determined by the heat drop in the steam at the entrance and at the exit. If c_0 is the flow velocity at the inlet and c_1 is the velocity at the outlet, i_1 and i_2 are the enthalpies at the entrance and at the exit, the velocity of outflow is

$$c_1^2/2 - c_0^2/2 = i_1 - i_2.$$

Hence

$$c_1 = \sqrt{2(i_1 - i_2) + c_0^2}.$$

For the initial velocity $c_0 \simeq 0$, we get

$$c_1 = \sqrt{2(i_1 - i_2)} = 1.41\sqrt{(i_1 - i_2)}.$$

If we express the enthalpies i_1 and i_2 in kJ/kg, then

$$c_1 = 44.8\sqrt{(i_1 - i_2)}.$$

The actual outlet velocity taking into account the external and internal friction is given by

$$c_1 = 44.8\varphi\sqrt{i_1 - i_2}.$$

The velocity coefficient for a nozzle is $\varphi = 0.92\text{-}0.98$. The choice of the nozzle type is determined by the pressure ratio $\beta = p_1/p_0$, where p_0 is the steam pressure in front of the nozzle and p_1 is the discharge pressure. If $\beta \geqslant \beta_{cr}$, simple converging nozzles are used, while Laval nozzles are utilized if $\beta < \beta_{cr}$. The critical pressure ratio β_{cr} for superheated steam is 0.546, while for dry saturated steam $\beta_{cr} = 0.577$. The end part of a nozzle supplying steam to the blades has a bevel cut which facilitates an additional expansion of steam and makes it possible to obtain supersonic steam velocities.

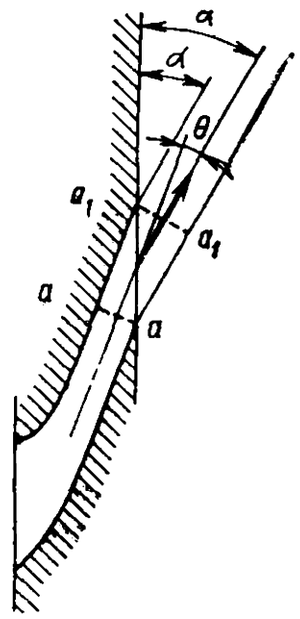

Fig. 120. Bevel-cut nozzle.

Consequently, a simple nozzle with a bevel cut can operate as a Laval nozzle. However, an additional steam expansion in a bevel-cut nozzle (both in a simple and in a Laval nozzle) is accompanied by a deviation of the jet from the nozzle axis towards the bevel cut (Fig. 120). If α is the bevel cut angle and θ is the angle of jet deflection in the bevel-cut, the angle determining the direction of the steam jet is

$$\alpha_1 = \alpha + \theta.$$

When a bevel cut is used for additional expansion of the steam, the deflection of the jet from the nozzle axis should be taken into consideration:

$$\sin \alpha_1 = \sin \alpha c_a v_1 / c_1 v_a$$

and

$$\theta = \alpha_1 - \alpha,$$

where c_a and v_a are the velocity and specific volume in cross section a, where a bevel cut begins, while c_1 and v_1 are the velocity and specific volume in cross section a_1.

The angle of inclination of the nozzles for impulse turbines is taken at $\alpha_1 = 14\text{-}25°$. The possibility of the replacement of Laval nozzles by simple diverging nozzles with a bevel cut is widely used in turbine manufacture. Laval nozzles are used when $\beta < 0.4$.

Steam Velocity on Turbine Blades. Steam should be delivered smoothly (without shocks) to turbine blades. For this purpose, nozzles are used (Fig. 121*a*). Turbine blades rotate at a circumferential

velocity u. Consequently, the relative inlet velocity of steam w_1 is less than the absolute velocity c_1. If we know c_1 and u (whose direction is constant), we can construct a parallelogram with side u and diagonal c_1 inclined at an angle α_1 to the plane of rotation of

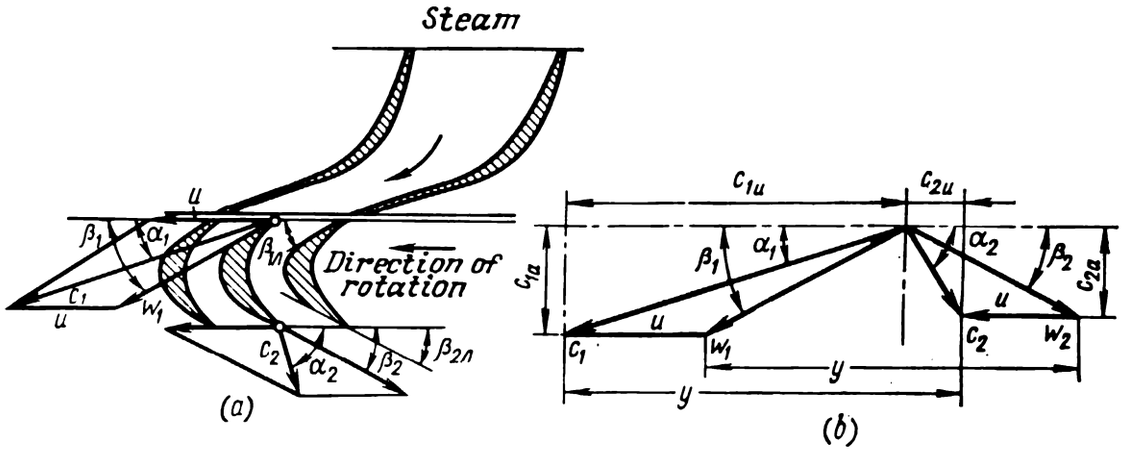

Fig. 121. Determination of steam velocity:
(*a*) parallelogram method; (*b*) triangle method.

the disc (the plane in which steam enters the rotor wheel). Then the other side of the parallelogram corresponds to the relative velocity w_1 of steam, which forms an angle α_1 with the plane of rotation of the turbine wheel. Analytically, we obtain

$$w_1 = \sqrt{c_1^2 + u^2 - 2uc_1 \cos \alpha_1}.$$

Here $w_1 \sin \beta_1 = c_1 \sin \alpha_1$. Hence we can find angle β_1.

Steam jet changes the direction at the blades and leaves them at the relative velocity w_2 at an angle β_2:

$$\beta_2 = \beta_1 - (3 - 10°).$$

The relative velocity w_2 of steam at the exit of the blades is less than the relative velocity w_1 of steam at the entrance by a factor of ψ_1 which takes into account the drag ($w_2 = \psi w_1$). The values of w_2 and u are used for constructing the parallelogram of velocities at the blade exit. The absolute velocity of steam at the exit, c_2, is found from this parallelogram:

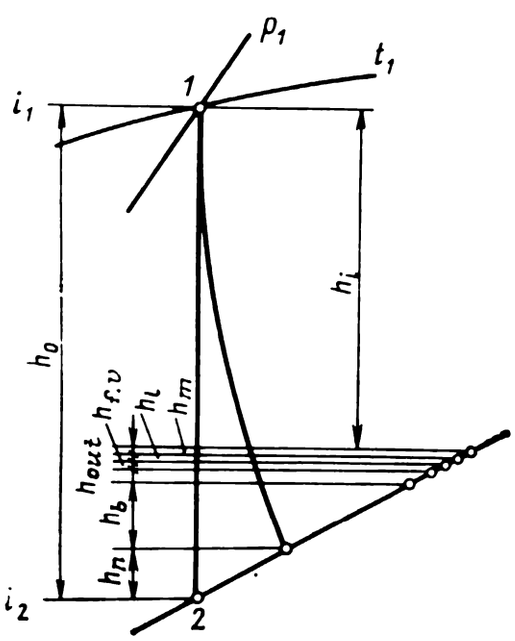

Fig. 122. To the determination of the enthalpy of waste steam, taking losses into account.

$$c_2 = \sqrt{w_2^2 + u^2 - 2uw_2 \cos \beta_2}.$$

When kinetic energy of steam is converted into mechanical energy, $c_2 < c_1$. In order to simplify calculations, velocity triangles are plotted in practice instead of parallelograms. These triangles have the common apex and do not take into account blade profile (Fig. 121*b*).

The useful work performed by 1 kg of steam on the turbine wheel is

$$l_{us} = c_1^2/2 - (w_1^2 - w_2^2)/2 - c_2^2/2$$

or

$$l_{us} = h_0 - (h_n - h_b - h_{out}),$$

where h_0 is the available heat drop, $h_0 = i_1 - i_2$, while h_n, h_b, and h_{out} are energy losses in nozzles, blades and the energy loss due to the outlet velocity.

The enthalpy of waste steam (leaving the blades) is higher than the enthalpy corresponding to the end of adiabatic expansion. The difference consists of h_n, h_b, h_{out}, the friction losses and vortex formation losses $h_{f.v}$, the leakage losses h_l, and the losses due to steam moisture h_m.

Heat losses in a turbine (Fig. 122) are taken into account by the relative indicated (internal) efficiency

$$\eta_{0i} = h_i/h_0.$$

20.5. Condenser Units for Steam Turbines

While considering a theoretical cycle of a steam power plant it was established that steam discharged from a turbine should be condensed. In order to increase the efficiency of the theoretical cycle, the

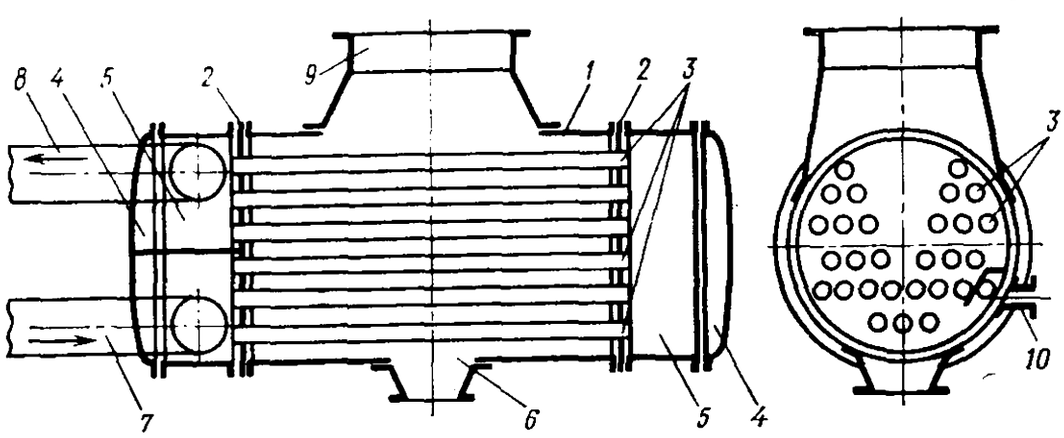

Fig. 123. Shell-and-tube type condenser:
1—shell; *2*—tube plates; *3*—brass tubes; *4*—covers; *5*—water chambers; *6*—outlet pipe; *7*—inlet pipe; *8*—outlet pipe to cooler; *9*—neck; *10*—outlet pipe to ejector.

values of the initial parameters should be increased and at the same time the pressure corresponding to the end of expansion process should be lowered. Steam in a turbine expands to the pressure $p_2 =$

0.005-0.0035 MPa and is discharged to a vacuum condenser. The most abundant are shell-and-tube type condensers (Fig. 123). A condenser consists of shell *1*, tube plates *2* into which brass tubes *3* are expanded. Water chambers *5* with covers *4* are mounted on both sides of the shell. Cooling water is supplied to the left chamber (with a partition) through pipe *7*. Cooling tubes arranged in front of the partition deliver water to the right (rotating) chamber *5*. Then water flows back along the upper bundle of cooling tubes to the left chamber (above the partition), and then is discharged to a cooler through tube *8*. Waste steam from the turbine enters the condenser through neck *9*, passes between the cooling tubes and condenses. The condensate is pumped from the condenser by a pump through outlet pipe *6*. In order to maintain a vacuum in the condenser, the steam-air mixture is pumped by a steam-jet ejector through outlet pipe *10*.

20.6. Classification of Steam Turbines

Steam turbines are classified into the following types:

according to steam performance, into impulse and reaction turbines (modern impulse turbines are reactive to a certain extent, their reactivity increasing from stage to stage);

according to the number of stages, into one-stage turbines with one or several velocity stages (this type of turbines is characterized by low power and is used for driving pumps, fans and other mechanisms) and multi-stage turbines (with a single Curtis disc and several pressure stages);

according to the direction of steam flow, into axial-flow (steam flows along the turbine axis) and radial-flow turbines (steam flows in a plane perpendicular to the rotational axis of the turbine rotor); axial-flow turbines have a wider application;

according to the number of cylinders (casings), into one-casing (the rotor of a turbine is in a single casing or in a cylinder), two-casing (two-cylinder) and three-casing turbines;

according to the nature of thermal process, into condensing turbines (the main steam flow is expanded from p_1 to p_2 and then discharged to a condenser and extraction turbines (waste steam from the turbine is completely or partially utilized in heat-supply systems);

according to steam parameters, into low-pressure turbines (p_1 = 0.12-0.2 MPa), moderate-pressure turbines (p_1 up to 4 MPa) high-pressure turbines (p_1 = 4.0-13.0 MPa), superhigh-pressure turbines (p_1 = 17.0-30.0 MPa); four stages of initial pressure, viz. 3.4, 8.8, 12.75 and 23.5 MPa are adopted at present in the USSR;

according to their purpose, into stationary turbines with a constant speed of rotation for electric generator drive, stationary tur-

bines with a varying speed of rotation for blowers, compressors, pumps, etc., and nonstationary turbines with varying speed of rotation, used on ships and locomotives.

Condensing turbines are marked by letter К. The turbines from which all waste steam having a pressure above 0.1 MPa is utilized for satisfying heat demand of industrial enterprises (or districts) are called *back-pressure turbines* and marked by P. Extraction turbines which deliver to a condenser only a part of the main steam flow, the other (larger) part due to intermediate stages of extraction (with controlled pressure) being utilized for heat supply, are called *condensing turbines with steam extraction.* If the pressure in a controlled steam extraction amounts to 0.12-0.25 MPa, the turbines are marked by letter T. If the pressure in the controlled extraction is 0.4 MPa or higher, the turbines are marked by П. If a turbine has the two controlled extractions (heating and process steam extractions), it is marked by ПТ. Excluding low-power turbines, condensing and extraction turbines have uncontrolled stages of steam extraction (the pressure in such an extraction stage depends on the turbine load) intended for feed water heating. The following values of nominal power (in MW) of turbine units are established: 1.5, 2.5, 4.0, 6.0, 12.0, 25.0, 50.0, 100, 200, 300. Turbines with the power of 500 and 800 MW have been constructed and turbine units with the power exceeding one million kilowatts are being designed.

Multi-casing units in which the spindles of individual cylinders are connected in series are called *single-spindle turbines.* Spindles are connected to each other with the help of muffles. Multi-cylinder turbines with a parallel arrangement of spindles are called *multi-spindle turbines* (the casings of such turbines are arranged in a row).

Abbreviated nomenclature for turbines can be deciphered in the following way: К-300-240/560/565 stands for condensing turbine with the power of 300 000 kW, steam pressure before the turbine is 24 MPa (240 kgf/cm^2), the temperature is 560 °C, the steam temperature after intermediate superheating is 565 K.

20.7. Steam Turbine Power Plants

There are two types of steam turbine power plants: condensing and heat-electric generating plants (thermoelectric plants). Condensing power plants (CPP) are based on condensing turbines. They mainly produce electric power. Large-scale CPP intended for supplying a power system are called district power plants. Thermoelectric plants employ extraction turbines and produce electric and thermal energy.

For district heat supply (of industrial plants), steam extracted from turbines (T, П, and ПТ turbines) or from back-pressure (back-pressure turbines P) is utilized. The production of electric and thermal

energy is of hybrid nature. Thermoelectric plants are usually built in cities and towns at the centre of heat loads, while district power stations are located in the regions of fuel production if water supply sources are available. If a district is supplied from a power system, heat is produced by industrial and heating boiler units. The main parts of a thermoelectric plant are fuel handling and transportation facilities, boiler unit (department), engine department, chemical water treatment department, industrial water supply system, slag-and-ash removal system, electrical engineering equipment (gene-

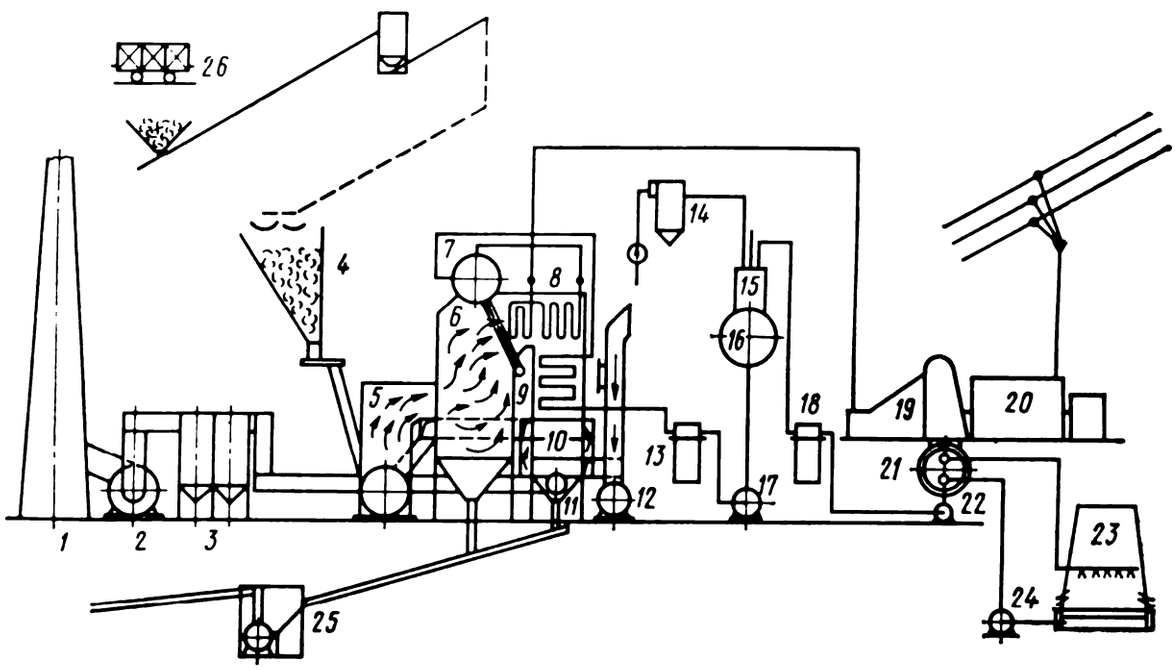

Fig. 124. Layout of a thermal power plant operating on solid fuel:
1—chimney; *2*—smoke exhauster; *3*—gas purifier; *4*—service bunker; *5*—hammer mill; *6*—boiler furnace; *7*—boiler drum; *8*—steam superheater; *9*—economizer; *10*—air preheater; *11*—combustion product outlet; *12*—blower; *13*—(high pressure) feed water heater; *14*—chemical treatment system; *15*—deaerator; *16*—feed water tank; *17*—feed pump; *18*—(low pressure) feed water heater; *19*—steam turbine; *20*—electric generator; *21*—turbine condenser; *22*—condensate pump; *23*—cooler; *24*—circulation pump; *25*—slag-and-ash-removal system; *26*—fuel unloading track.

rators, main distributing unit and distributing unit for local requirements), auxiliary departments (maintenance repair shop, heat-control department, motor transport repair shop, etc.).

Figure 124 represents the schematic diagram of a condensing power plant utilizing a solid fuel. Freight cars deliver fuel to receiving-unloading track *26* where it is unloaded to service bunkers *4* or to the fuel store-house. Before being delivered to service bunkers, fuel is crushed in a crusher. From the service bunkers, the fuel is sent to hammer mills *5* where it is ground, then dried and blown into boiler furnace *6* in the form of air-dust moisture. The combustion products of the fuel pass through the gas ducts of the boiler, steam superheater *8*, economizer *9*, air preheater *10* and are then discharged

into the atmosphere through chimney stack *1*. Furnace refuses are discharged from ash-and-slag bunkers to slag-and-ash-removal system *25* and transported outside the power plant boundary. The boiler is fed with water from feed water tank *16* by feed pump *17*. On its way to the boiler drum, water passes through high-pressure heater *13* and the economizer. Saturated steam is sent from boiler drum *7* to steam superheater *8*. After that steam flows to turbine *19*. Waste steam is discharged into condenser *21*, where it condenses and with the help of condensate pump *22* is delivered through low-pressure heater *18* to deaerator *15* and then to the feed water tank.

The heat liberated during the condensation of waste steam is transferred to cooling water which circulates in the circuit consisting of the condenser *21*, cooler *23*, and circulation pump *24*. In addition to the condensate from the turbine condenser, the condensate from steam users and feed water after chemical treatment *14* enter the feed tank through the deaerator.

Thus, in a thermoelectric steam turbine power station, the energy of fuel is transformed into thermal energy in the steam generator furnace. Heat is transferred from hot gases through heating surfaces to water. Water is heated and converted into steam. Superheated steam enters the turbine and sets the rotor in motion. In the turbine, thermal energy is converted into mechanical energy. From the turbine rotor, rotation is transmitted to the rotor of a generator to whose windings an exciting current is supplied. The magnetic field lines of the rotor cross the winding of the generator stator in which an e.m.f. is induced. Electric energy is transmitted by the power system to the user through a switch-gear.

A distinctive feature of electric power production is the continuous link between the processes of energy production and consumption (at each instant of time, the amount of produced power should be correlated with the users' demand). The voltage and current frequency, the pressure and temperature of heat-transfer agents should be in accord with specifications over the entire period of power supply. The scale and regime of power consumption determine technical-and-economic indices of thermo-electric power station. Consequently, before choosing the power and the type of equipment for an electric power station, heat and electric power demand should be determined for a given district as well as the type of fuel and the block diagram of power supply system. The choice of the type of power supply (from a thermoelectric plant using a combined system of district power supply or from electric power station and industrial-and-heating boilers through separate system of power supply) is made on the basis of a comparison of possible variants from the point of view of technology and economy. Then the thermal diagram of the thermoelectric plant of the chosen type is designed. On the basis of calculations, the flow rates of steam, water and condensate are

determined for all sections of thermal diagram, auxiliary equipment is chosen and the correctness of the choice of basic equipment is verified.

The results of the analysis of the thermal diagram for the electric power station are used for determining the water and steam balance. The thermal block diagram of a thermoelectric plant schematically represents the units of equipment of this plant and the links between

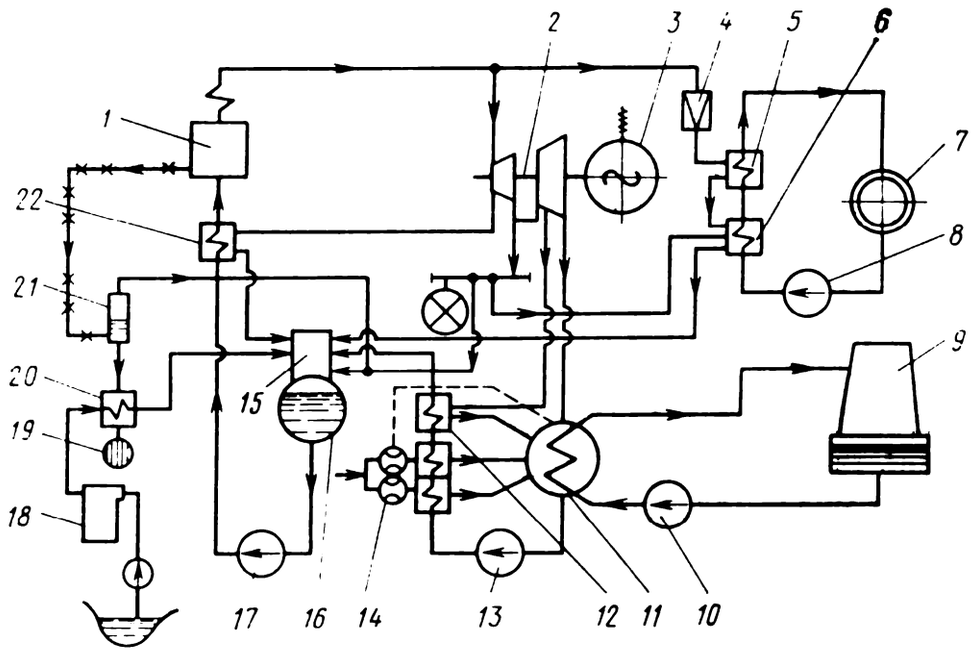

Fig. 125. Schematic diagram of a thermal power plant:
1—steam boiler; *2*—turbine; *3*—generator; *4*—regulating and cooling system; *5*—peak-load heater; *6*—main heater; *7*—load; *8*—heating-system pump; *9*—cooler; *10*—circulation pump; *11*—condenser; *12*—low-pressure heater; *13*—condensate pump; *14*—steam ejector; *15*—deaerator; *16*—feed tank; *17*—feed pump; *18*—water chemical treatment system; *19*—waste water discharge; *20*—blowdown water cooler; *21*—flash tanks for continuous blowdown; *22*—high-pressure heater.

these units. On a layout of a thermal system, similar units are depicted by similar symbols. Stop valves and control valves are not shown on the diagram.

Figure 125 shows a schematic diagram of the thermal system of a thermal power plant. From steam generator *1*, steam flows to steam turbine *2* which sets generator *3* in motion. The waste steam is discharged from the turbine to condenser *11*. Condensate pump *13* delivers the condensate through ejector heaters, low-pressure heater *12* and deaerator *15* to feed tank *16*. Feed water is delivered from the feed tank to the steam boiler by feed pump *17* through high-pressure heater *22*. Feed water is heated by steam taken from uncontrolled extraction stages of the turbine. Feed water losses are replenished by the water which undergoes chemical treatment in system *18*, passes through blowdown water cooler *20*, and is then supplied to

the feed tank. Continuous blowdown of steam generators is ensured by flash tanks *21*. Blowdown water vapour from the flash tank is supplied to the deaerator, and, after giving off the heat in the cooler, the water is discharged through waste-water discharge system *19*. Water is fed to the condenser with the help of circulation pump *10* which takes water from cooler basin *9*. Air is pumped from the condenser by steam ejector *14*. Heating-system water for consumers (load) *7* is heated in main heater *6* and peak-load heater *5*. Steam for the main boiler is tapped from the controlled extraction stage of the turbine. Heating-system water is pumped by heating-system pump *8*.

Thermal layout for a steam turbine electric power plant with condensing-type turbines differs from the diagram described above in that it has no controlled stage of steam extraction for external heat load. Thermal diagram for an electric power station with back-pressure turbines differs from thermal diagrams for electric power stations with T- or П-type turbines in that it involves no condenser. Waste steam from the turbines of such electric power plants is utilized in heat-supply systems.

Arrangement of a Thermoelectric Plant. The arrangement of a power plant includes the mutual arrangement of various departments of a thermoelectric plant and the distribution of the equipment. The following requirements should be met while choosing an arrangement: the simplest possible system of heat and energy production should be ensured; the arrangement of equipment in the departments and communications between separate units should ensure the simplicity and reliability of the service; the arrangement of equipment should ensure convenient maintenance and operation, and initial capital outlay and operating costs should be minimal. Finally, while choosing the layout, future development of the electric power plant should be envisaged.

Mutual arrangement of main departments of steam turbine power plants. The mutual arrangement of the boiler unit and engine room forms the basis of the lay-out of a steam turbine power plant. The parallel arrangement of these units (without a gap between the departments) is widely used. The main advantages of such an arrangement are the possibility of levelling out the length of the boiler room and the engine room and the possibility of retaining the system of main pipes in the case of expansion of the plant. Figure 126 shows three diagrams of arrangement of steam turbine power plants.

An engine room may adjoin the boiler room either from the side of boiler front, i.e. on the furnace side (Fig. 126*a*), or on the tail heating surface side, viz., on the side of economizers and air heaters (Fig. 126*b*). If the engine room is located in front of steam generators, we have a short gas tract with smoke exhausters and fans at a zero level.

Such an arrangement of the engine room ensures the plant development involving the utilization of high-power boilers without modifying the fuel-supply tract. The drawback of such an arrangement is the shadowing of the operation area and the violation of the flow continuity principle (the condensate should be delivered from the engine room to the economizers located on the opposite side of the boiler room).

When the engine room is arranged from the side of the tail heating surfaces of the boiler, the gas tract becomes longer. Sometimes, it

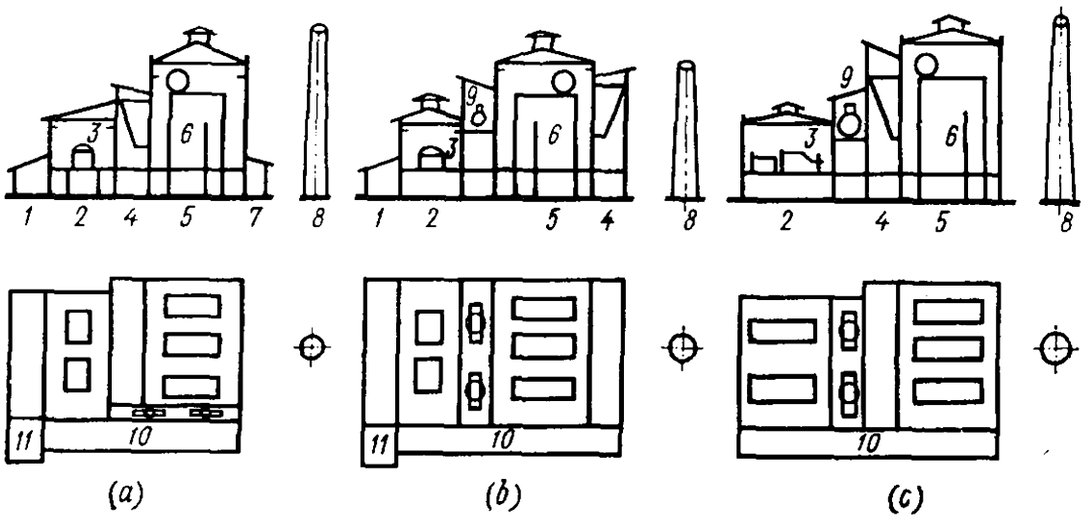

Fig. 126. Possible layouts for thermal power plants:
(*a*) engine room on the furnace side; (*b*) engine room on the economizer and air preheater side; (*c*) combination of bunker and deaerator units; *1*—main distribution unit; *2*—engine room; *3*—turbo-generator; *4*—bunker room; *5*—boiler room; *6*—boiler unit; *7*—exhaust fan room; *8*—chimney; *9*—feed water tank; *10*—service room; *11*—control panel.

becomes necessary to mount metallic chimneys in the space between the engine room and the boiler room, which involves the erection draft systems at high levels.

The main switch-gear of a low-power electric power plant is mounted in a special extension of the electric power plant or located in parallel to the engine room (without a gap). For large-scale electric power plants, the switch-gear is arranged in a special building which is parallel to the engine room.

Layout of Basic Equipment in the Departments. Boiler units are arranged perpendicularly to the longitudinal axis of the boiling room with the gaps which ensure the convenience of assembly and maintenance. Steam generators can be mounted in the engine room along its longitudinal axis (longitudinal arrangement) or perpendicularly to it (transverse arrangement). With longitudinal arrangement of a turbine-driven set, the front of attendance of the units is common, but the engine room span becomes larger in comparison with that for the longitudinal arrangement of equipment. Auxiliary

equipment is located in the main departments. Smoke exhausters and fans are sometimes taken outside the boiler room.

At present, block electric power stations have found a wide application. The attempts to decrease the length and to simplify communications between the steam generator and the turbine have led to the arrangement of turbines across the engine room axis.

In regions with warm climate, open and half-open electric power stations can be constructed, in which individual parts and units or the entire equipment of the plant are located outdoors.

Thermal Economical Efficiency. Thermal economical efficiency of an electric power station is characterized by the efficiency η_{ps}. For steam turbine power stations, the gross efficiency and the net efficiency are distinguished. The gross efficiency is determined according to the amount of produced energy E_p disregarding the auxiliary power expenditures (E_{ap}). This power is spent for driving auxiliary mechanisms in the process of production of electric energy and heat. The net efficiency is characterized by the output power E_{out} of the plant. For determining the efficiency of an electric power station, the energy produced per year is calculated:

$$E_p^{year} = E_{out}^{year} + E_{ap}^{year}. \tag{20.4}$$

If we divide the right-hand side of this equation by E_p^{year} and denote the ratio E_{ap}^{year}/E_p^{year} by k_{ap} (auxiliary power coefficient), then

$$E_{out}^{year} = E_p^{year}(1-k_{ap}).$$

For a condensing power plant, the gross efficiency is given by

$$\eta_{ps}^{gr} = E_p^{year} \cdot 3.6/B^{year}Q_l^w.$$

The net efficiency is

$$\eta_{ps}^{net} = E_{out}^{year} \cdot 3.6/B^{year}Q_l^w,$$

where E_p^{year} and E_{out}^{year} are the amounts of energy produced and delivered per year, in kW·hr; 3.6 is the thermal equivalent; B^{year} is the natural fuel rate per year, kg; and Q_l^w is the low heat value of a natural fuel in MJ/kg. The net efficiency can be presented in a different form:

$$\eta_{ps}^{net} = \eta_{ps}^{gr}(1-k_{ap}).$$

Denoting by b the ratio B^{year}/E_p^{year} in kg (eq. f.)/(kW·hr) and assuming that for the fuel equivalent $Q_l^w = 29.3$ MJ/kg, we obtain the plant efficiency in the form

$$\eta_{ps}^{gr} = 0.123/b_p.$$

The quantity b_p is called the rate of equivalent fuel per kilowatt-hour of produced energy.

For a heat-electric generating plant (HEGP), the net efficiency of the thermoelectric plant (the coefficient of utilization of heat given off by the fuel) and partial efficiencies for generating electric power and heat are distinguished.

The fuel efficiency of an HEGP is

$$\eta_{HEGP} = (E_p^{year} \cdot 3.6 + \sum Q_{out}^{year})/B^{year} Q_l^w,$$

where $\sum Q_{out}^{year}$ is the amount of heat transmitted from the HEGP to the consumer and $B^{year} Q_l^w$ is the amount of heat liberated upon burning the fuel.

For finding partial efficiencies of an HEGP the fuel rate per year B_{el}^{year} should be nominally related both to the electric B_{el}^{year} and thermal B_t^{year} energies produced per year: $B_{el}^{year} + B_t^{year} = B^{year}$.

The partial electric efficiency of a HEGP is

$$\eta_{HEGP}^{el} = E_p^{year} \cdot 3.6/B_{el}^{year} Q_l^w.$$

The partial thermal efficiency of a HEGP is

$$\eta_{HEGP}^{t} = \sum Q_{out}^{year}/B_t^{year} Q_l^w.$$

In this method of estimating the economical efficiency of a HEGP, the entire gain from the combined production of electric and thermal energies is conditionally referred to an increase in the practical electrical efficiency of the HEGP.

As a result of simple transformations of the above formulas, the efficiency of a condensing electric power station is obtained in the following form:

$$\eta_p^{gr} = \eta_p^{net} \eta_{sl} \eta_{el},$$

where η_b^{net} is the net efficiency of the boiler, η_{sl} is the efficiency of the steam line connecting the boiler and the engine rooms, and η_{el} is the absolute electric efficiency of the steam generator.

In its turn,

$$\eta_{el} = \eta_t \eta_{oi} \eta_m \eta_g$$

where η_t is the thermal efficiency of an ideal cycle, η_{oi} is the relative internal efficiency of the turbine, η_m is the mechanical efficiency of the turbine-driven generator, and η_g is the efficiency of electric generator.

After the substitution, we obtain

$$\eta_p^{gr} = \eta_b^{net} \eta_{sl} \eta_t \eta_{oi} \eta_m \eta_g$$

The coefficients η_b^{net}, η_{sl}, η_{ol}, η_m and η_g characterize the degree of technological perfection of basic units of the electric power station. For modern power plants, the product of these coefficients ranges between 0.65 and 0.75, and varies insignificantly with the variation of the initial parameters.

The most important role in increasing the efficiency of an electric power plant, and hence for reducing the fuel rate, is played by the thermal efficiency of a cycle:

$$\eta_t = h_0/(i_1 - i_c),$$

where h_0 is the available heat drop, i_1 is the initial enthalpy of steam and i_c is the enthalpy of condensate.

The available heat drop can be increased by elevating the initial pressure and temperature of steam. A further increase in the thermal efficiency is ensured by utilizing regenerative heating of feed water and intermediate steam superheating.

Test Questions

1. Which thermodynamic cycle forms the basis of operation of steam turbine power plants?
2. How can the efficiency of the Rankine cycle be determined?
3. How can we determine the theoretical heat rate per kilowatt-hour of the energy produced by a steam turbine power plant?
4. How do the initial parameters of steam affect the economical efficiency of a steam turbine power station?
5. For which purpose is intermediate steam superheating used?
6. Which electric power stations are called heat-electric generating plants?
7. What do we call regenerative heating of feed water?
8. What are the main operational principles of steam turbines?
9. Which turbines are called impulse turbines?
10. What for are nozzles used in steam turbines?
11. How is the velocity of steam flow from a nozzle determined?
12. What do we call relative indicated (internal) efficiency of a turbine?
13. What for are condensers of steam turbines intended? Describe their construction.
14. Which typical features form the basis of steam turbine classification?
15. How is the turbine nomenclature T-100-130/565 deciphered?
16. Name the basic units and setups in a steam turbine power plant.
17. What is the basic problem in designing the thermal layout of an electric power station?

18. How is the partial electric efficiency of a steam turbine power plant determined?
19. What do we call the net efficiency and the gross efficiency?
20. How is the partial heat efficiency determined?
21. How is the fuel efficiency of a thermoelectric plant determined?

Chapter Twenty One

INTERNAL COMBUSTION ENGINES

21.1. The Cycles of Internal Combustion Engine

Internal combustion engines (ICE) are piston heat engines intended for transforming the thermal energy of fuel burnt inside the working cylinder into mechanical energy. Combustion engines have found a wide application in ships, aeroplanes, railway transport, in agriculture, etc. The theoretical ICE cycle is a closed process of variation of the state of a working fluid, as a result of which thermal energy is converted into mechanical energy. In a thermodynamic analysis of ICE cycles, the working fluid is an ideal gas whose amount remains constant at any moment of the cycle, and all the processes of the cycle are assumed to be reversible. ICE cycles are distinguished by a typical feature of the process during which heat is supplied to the working fluid, viz. the cycle with heat supply at constant volume (v = const), the cycle with heat supply at constant pressure (p = const), and the cycle with a mixed heat supply in the processes v = const and p = const.

The parameters of a working substance and the thermal efficiency are determined on the basis of the analysis of the processes constituting a cycle. A cycle with heat supply at v = const is shown in Fig. 127*a*. In the process corresponding to curve *1-2*, the working fluid is adiabatically compressed from the initial pressure p_1 to pressure p_2. During this process, the temperature and volume of the gas change from T_1 to T_2, and from v_1 to v_2.

It follows from the adiabatic equation that

$$T_2/T_1 = (v_1/v_2)^{k-1};\ p_2/p_1 = (v_1/v_2)^k.$$

The compression ratio $v_1/v_2 = \varepsilon$.

These equations show that $T_2 = T_1\varepsilon^{k-1}$, $p_2 = p_1\varepsilon^k$.

In the process described by curve *2-3*, heat q_1 is supplied to the working fluid at v = const. It is well known that when v = const, $p_3/p_2 = T_3/T_2$. The ratio $p_3/p_2 = \lambda$ is called the *degree of elevation of pressure* (*pressure ratio*).

The pressure and temperature at point *3* are given by

$$T_3 = T_2\lambda = T_1\varepsilon^{k-1}\lambda; \quad p_3 = p_2\lambda = p_1\varepsilon^k\lambda.$$

In the process corresponding to curve *2-3* (v = const), heat q_1 supplied to the working fluid is completely converted into the internal energy of the gas, which is partially transformed into mechanical

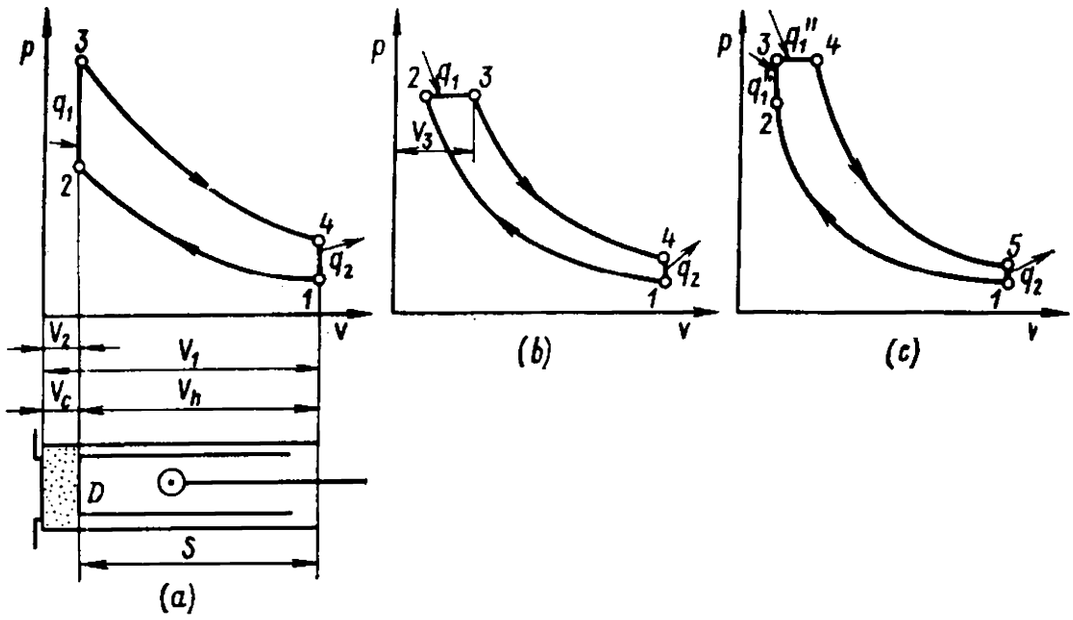

Fig. 127. Theoretical cycles of internal combustion engines: (*a*) with heat supply at v = const; (*b*) with heat supply at p = const; (*c*) mixed cycle.

energy during the gas expansion corresponding to curve *3-4*, and is partially given off to the cooler during the process described by curve *4-1*.

In the theoretical cycle, the process corresponding to curve *3-4* is adiabatic. Therefore, the relation $T_4/T_3 = (v_3/v_4)^{k-1}$ is valid. On the other hand, $v_3 = v_2$ and $v_4 = v_1$. Hence $T_4/T_3 = (v_2/v_1)^{k-1} = 1/\varepsilon^{k-1}$, and $T_4 = T_3\,(1/\varepsilon^{k-1})$, or

$$T_4 = T_1\lambda; \quad p_4/p_3 = (v_3/v_4)^k; \quad p_4 = p_3 1/\varepsilon^k \text{ and } p_4 = p_1\lambda.$$

The amounts q_1 and q_2 of supplied and removed heat are given by

$$q_1 = c_v\,(T_3 - T_2); \quad q_2 = c_v\,(T_4 - T_1).$$

The thermal efficiency of the cycle is

$$\eta_t = 1 - \frac{q_2}{q_1} = 1 - \frac{T_4 - T_1}{T_3 - T_2} = 1 - \frac{1}{\varepsilon^{k-1}}.$$

It follows from this formula that the thermal efficiency η_t of the cycle increases with compression ratio.

Figure 127*b* shows a cycle with a heat supply at constant pressure p = const (in the isobaric process). The working fluid having the

initial parameters p_1, v_1, T_1 (point *1*) is adiabatically compressed to p_2 (point *2*). Then a certain amount of heat q_1 is supplied to the working fluid at constant pressure in the process described by segment *2-3*. In this process, the volume of the working fluid increases from v_2 to v_3. The ratio $v_3/v_2 = \rho$ is called the *preliminary expansion ratio*.

While determining the parameters of the working fluid at the characteristic points of a cycle, it is necessary to take into account the peculiarities of the thermodynamic processes forming the cycle. For adiabat *1-2*, $v_2 = v_1/\varepsilon$, $p_2 = p_1\varepsilon^k$ and

$$T_2/T_1 = (v_1/v_2)^{k-1} = \varepsilon^{k-1}; \quad T_2 = T_1\varepsilon^{k-1}.$$

Process *2-3* is isobaric: $v_3 = v_2\rho = v_1(\rho/\varepsilon)$, $p_3 = p_2 = p_1\varepsilon^k$ and we have

$$T_3/T_2 = v_3/v_2 = \rho; \quad T_3 = T_2\rho = T_1\varepsilon^{k-1}\rho.$$

For the adiabatic process characterized by curve *3-4* (considering that process *4-1* is isochoric), we can write $v_4 = v_1$, $p_4 = p_3(v_3/v_4)^k = p_1\varepsilon^k(v_2\rho/v_1)^k = p_1\rho^k$,

$$p_4 = p_1\rho^k;$$
$$T_4/T_3 = (v_3/v_4)^{k-1} = (v_3/v_1)^{k-1}, \text{ since } \rho/\varepsilon = v_1/v_2: \; v_3/v_2 = v_3/v_1;$$
$$T_4 = T_3(\rho/\varepsilon)^{k-1} = T_3\varepsilon^{k-1}/\rho(\rho^{k-1}/\varepsilon^{k-1}) = T_1\rho^k.$$

In this case the thermal efficiency of the cycle is

$$\eta_t = 1 - q_2/q_1 = 1 - c_v(T_4 - T_1)/c_p(T_3 - T_2)$$
$$= 1 - \frac{T_1\rho^k - T_1}{k(T_1\varepsilon^{k-1}\rho - T_1\varepsilon^{k-1})} = 1 - \frac{1}{\varepsilon^{k-1}}\frac{\rho^k - 1}{k(\rho - 1)}.$$

It follows from this equation that the thermal efficiency of a cycle with isobaric heat supply increases with the compression ratio and the adiabatic exponent k, but decreases with increasing preliminary compression ratio.

Figure 127*c* shows a cycle with a mixed heat supply in processes v = const and p = const. Using the notation introduced above ($v_1/v_2 = \varepsilon$, $p_3/p_2 = \lambda$, $v_4/v_3 = v_4/v_2 = \rho$), the parameters of the working fluid at the characteristic points are:

at point *2*, $v_2 = v_1\varepsilon$, $p_2 = p_1\varepsilon^k$,

$$T_2/T_1 = (v_1/v_2)^{k-1} = \varepsilon^{k-1}; \quad T_2 = T_1\varepsilon^{k-1};$$

at point *3*, $v_3 = v_2 = v_1/\varepsilon$, $p_3 = p_2 = p_1\varepsilon^k\lambda$;

$$T_3/T_2 = p_3/p_2 = \lambda; \quad T_3 = T_2\lambda; \quad T_3 = T_1\varepsilon^{k-1}\lambda;$$

at point 4, $v_4 = v_3\rho = v_1\rho/\varepsilon$, $p_4 = p_3 = p_1\varepsilon^k\lambda$;

$T_4/T_3 = v_4v_3 = \rho$; $T_4 = T_3\rho$; $T_4 = T_1\varepsilon^{k-1}\lambda\rho$;

at point 5, $v_5 = v_1$, $p_5 = p_4\,(v_4/v_5)^k = p_1\varepsilon^k\lambda\,(v_1\rho/v_1\varepsilon)^k = p_1\rho^k\lambda$;

$T_5/T_4 = (v_4/v_5)^{k-1} = (v_4/v_1)^{k-1}$;

$\rho/\varepsilon = (v_4/v_3):(v_1/v_2) = v_4/v_1$; T_5/T_4

$= (\rho/\varepsilon)^{k-1}$; $T_5 = T_1\varepsilon^{k-1}\lambda\rho\,\dfrac{\rho^{k-1}}{\varepsilon^{k-1}}$; $T_5 = T_1\lambda\rho^k$.

The thermal efficiency of the cycle is

$$\eta_t = 1 - \frac{q_2}{q_1' + q_1''} = 1 - \frac{c_v\,(T_5 - T_1)}{c_v\,(T_3 - T_2) + c_p\,(T_4 - T_3)}$$
$$= 1 - [c_v(T_1\lambda\rho^k - T_1)]/[c_v\,(T_1\varepsilon^{k-1}\lambda - T_1\varepsilon^{k-1}) + c_p\,(T_1\varepsilon^{k-1}\lambda\rho - T_1\varepsilon^{k-1}\lambda)].$$

After transformations, we obtain

$$\eta_t = 1 - \frac{1}{\varepsilon^{k-1}}\,\frac{\lambda\rho^k - 1}{(\lambda - 1) + k\lambda\,(\rho - 1)}.$$

It follows from this formula that the efficiency of a cycle increases with k, ε and λ. An increase in the preliminary expansion ratio ρ leads to a decrease in η_t.

Table 5 contains the values of the thermal efficiencies of the cycles of internal combustion engines for different compression ratios ε provided that the amount of the supplied heat is the same in all cases.

Table 5

Cycles	Compression ratio					
	2.5	5	10	15	20	25
Isochoric, $v = \text{const}$	31	47.7	61	68.1	70	71.5
Mixed, $v = \text{const}$	23	40	56	63.8	69.2	70
Isobaric, $p = \text{const}$	14.2	33.8	51	58.4	64.6	68.4

The actual processes occurring in ICE differ from theoretical ones. The working fluid in an ICE is a real gas (combustion products of a fuel in the cylinder of the engine). The operation of real engines is accompanied by friction, energy losses due to heat transfer, and so on. The processes constituting the cycle of an ICE are practically irreversible. When the results of analysis of theoretical cycles are used for calculating real engines, correction factors should be introduced.

21.2. Operational Principle and Classification of ICE

Basic structural units of an internal combustion engine are the main mechanism (including a cylinder, a piston and a crank mechanism), a gas distributor, a fuel supply system, an ignition system (in low-pressure engines), a cooling system, a lubrication system, and control and protection devices.

Figure 128 represents a schematic diagram of operation of a four-stroke internal combustion engine. Fuel is burnt in cylinder *1*. Gases produced as a result of combustion of the fuel act on piston *5* which

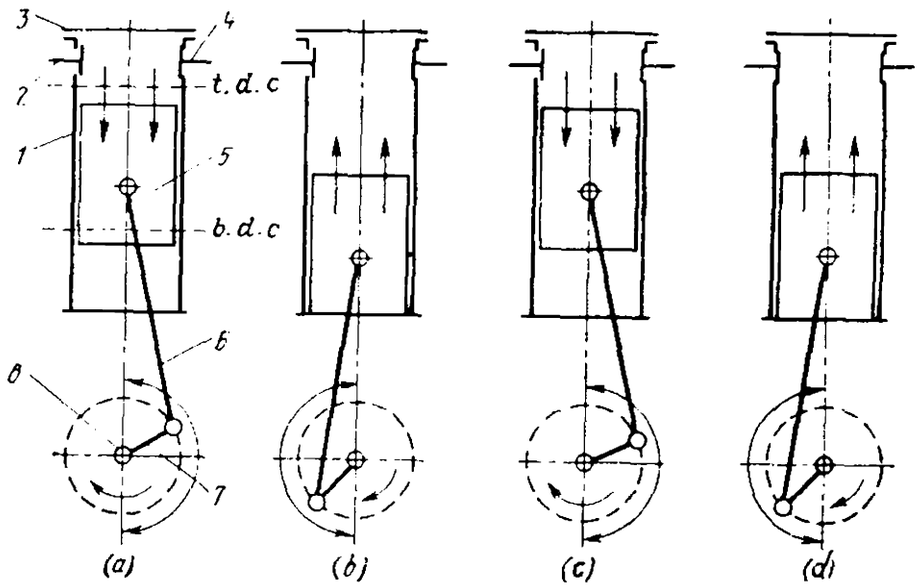

Fig. 128. Operation of a four-stroke internal combustion engine:
(*a*) intake stroke; (*b*) compression stroke; (*c*) working stroke; (*d*) exhaust stroke; *1*—cylinder; *2*—intake valve; *3*—cylinder head; *4*—exhaust valve; *5*—piston; *6*—connecting rod; *7*—crank; *8*—shaft

reciprocate in the cylinder and rotates crankshaft *8* with the help of the crank mechanism. The shaft of the engine is connected with the shaft of the mechanism driven by the ICE through a coupling. Before burning the fuel in the cylinder of the engine, the fuel should be mixed with air, i.e. fuel-air (combustible) mixture should be prepared. This mixture can be prepared before it enters the cylinder of the engine. In this case, prepared fuel-air charge is fed to the cylinder. Such engines are called *carburettor engines*. The mixture is prepared in a special device called *carburettor* (when working fluid is petrol or kerosene) or in a mixer (in the case of a gaseous fuel). The pressure and temperature at the end of compression should be such that self-ignition cannot yet occur (pressure should range from 1 to 1.8 MPa). At the end of compression, fuel is ignited by an electric spark produced by a special ignition system.

In an ICE with fuel injection, fuel-air mixture is prepared inside the cylinder. At first, the cylinder is filled with pure air. Then air

is compressed to 3-4 MPa, which causes an increase in temperature to 500-600 °C. Fuel is injected into the cylinder at the end of compression and self-ignited. The internal combustion engines in which the fuel-air mixture ignites under high compression are called *high-compression engines*. In some engines, the mixture is prepared inside but the ignition is forced, since the pressure at the end of compression is below the level corresponding to self-ignition of the fuel-air mixture. The combustion products expand (pushing the piston)

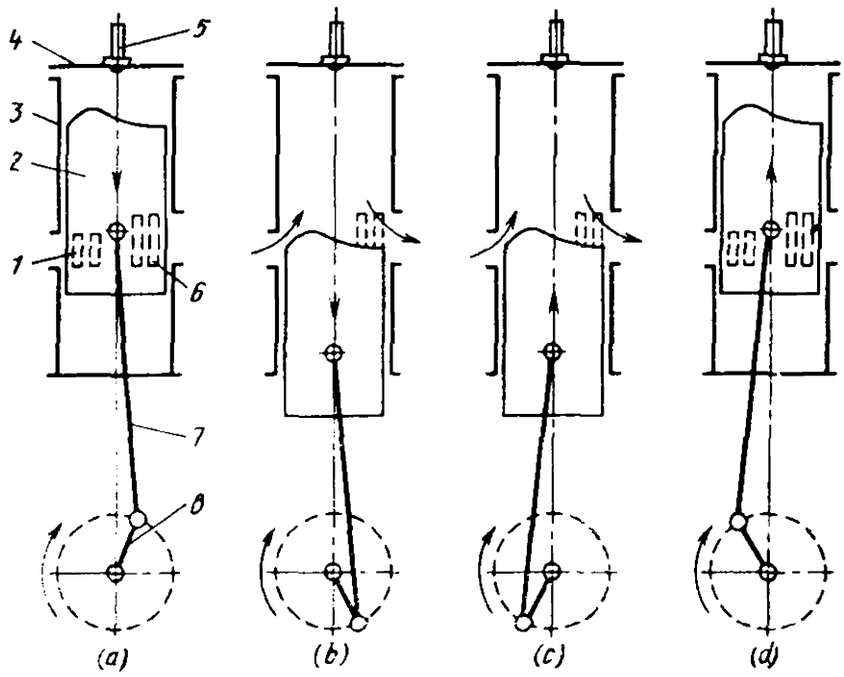

Fig. 129. Operation of two-stroke ICE:
(*a*) working stroke; (*b*) combustion products exhaust stroke; (*c*) cylinder charging and scavenging; (*d*) compression; *1*—intake ports; *2*—piston; *3*—cylinder; *4*—cylinder head; *5*—ignition system; *6*—scavenging ports; *7*—connecting rod; *8*—crankshaft.

and are then discharged from the cylinder. After the removal of combustion products, the cylinder is again charged with a new portion of fuel-gas mixture. The working cycle of an ICE can be performed during four or two strokes of the piston. Accordingly, ICE are called *four-stroke* or *two-stroke engines*.

In a four-stroke engine (see Fig. 128), during the first stroke of the piston from cylinder head *3* to the shaft, the cylinder is filled with a fuel-air mixture (in low-compression engines) or pure air (in high-compression ICE). Then the piston moves from the shaft to the head (the second stroke) when compression occurs. At the end of the compression stroke, the fuel-air mixture is ignited either by an electric spark (in low-compression ICE) or as a result of a high compression (in high-compression ICE). Expanding combustion products exert a pressure on the piston. Then the third stroke begins. The piston moves from the head to the shaft. Combustion products are exhausted during the motion of the piston from the shaft to

the head (the fourth stroke). During the entire cycle (four strokes of the piston), the shaft makes two revolutions. The charging of the fuel-air mixture into the cylinder and the exhaust of the combustion products occur through two valves (intake valve *2* and exhaust valve *4*) which are coupled with the main shaft of the engine.

In a two-stroke engine (Fig. 129), the entire cycle is performed during two strokes of the piston. In this case, the crankshaft makes one revolution. The charging of the fuel-air mixture and the exhaust of the combustion products from the cylinder occur through intake ports *1* and scavenging ports *6*. The working stroke of the piston starts from the cylinder head *4* towards the shaft during the expansion of combustion products. At the end of the stroke, first intake and then scavenging ports are opened.

At the first instant, combustion products are exhausted from the cylinder due to the pressure drop between the cylinder and the exhaust pipe, and then (after the scavenging ports are opened), due to scavenging by air which is preliminarily compressed in the crank chamber. When the piston moves from the shaft to the head (the second stroke), scavenging and charging of the cylinder by fresh air continues until the scavenging and outlet ports are closed. After the scavenging and exhaust ports are closed (by the piston), the compression of air begins. At the end of this stroke, the fuel is injected into the cylinder, where it is ignited and burnt.

In two-stroke carburettor ICE a prepared fuel-air mixture is used for scavenging (and charging of the cylinder) and forced ignition is realized (from ignition system *5*).

21.3. Heat Balance and Efficiency of ICE

The *heat balance of internal combustion engines* is the equality between the amount of heat supplied to the cylinder by the fuel, on the one hand, and the expenditures of this heat, on the other. The heat balance equation of an ICE for 1 kg of supplied fuel is

$$Q_l^w = Q_e + Q_{cool} + Q_w + Q_{chem} + Q_{other},$$

where Q_l^w is the low heat value of the fuel, Q_e is the heat converted into effective work, Q_{cool} is the heat lost for cooling the engine, Q_w is the heat lost due to waste gas, Q_{chem} is the heat lost due to incomplete combustion of the fuel and Q_{other} stands for other heat losses.

The components of the heat balance equation can be represented in the relative units or percent of consumed fuel:

$$100\% = q_e + q_{cool} + q_w + q_{chem} + q_{other}$$

where $q_e = (Q_e/Q_l^w)\,100\%$; $q_{cool} = (Q_{cool}/Q_l^w)\,100\%$; $q_w = (Q_w/Q_l^w)\,100\%$; $q_{chem} = (Q_{chem}/Q_l^w)\,100\%$; and $q_{other} = (Q_{other}/Q_l^w)\,100\%$.

The components of the heat balance level are determined by testing the engine. The average values of individual components under nominal (rated) load are (in %): for Diesel engine $q_e = 30\text{-}45$; $q_{cool} = 15\text{-}35$; $q_w = 25\text{-}45$; $q_{chem} = 0\text{-}5$; $q_{other} = 2\text{-}5$; and for carburettor engine $q_e = 16\text{-}28$, $q_{cool} = 12\text{-}20$, $q_w = 30\text{-}55$; $q_{chem} = 0\text{-}4.5$; $q_{other} = 3\text{-}8$.

The effective efficiency of an engine $\eta_e = q_e$ can be also determined in terms of the fuel rate $b_e = B/N$ (kg/(kW·hr)) and the low heat value Q_l^w:

$$\eta_e = 3600/b_e Q_l^w.$$

Test Questions

1. What engines are called internal combustion engines?
2. Which ICE cycles do you know?
3. How can the parameters of a working fluid at the characteristic points of a cycle be determined?
4. How is the amount of heat q_1 and q_2 supplied to and removed from the cycle determined if heat is supplied at constant volume?
5. Which formula is used for determining the thermal efficiency of an ICE operating according to a cycle with heat supply at constant volume?
6. Which formula is used for determining the thermal efficiency of an ICE operating according to a cycle with heat supply at constant pressure?
7. Which ICE cycle is called the cycle with a mixed heat supply?
8. What are the main parts of an internal combustion engine?
9. According to which properties are ICE classified?
10. What are the typical features of a high-compression ICE?
11. Which ICE are called two-stroke and four-stroke engines?
12. What are the average values of individual components of the heat balance equation under rated load?
13. How are the fuel rate and the efficiency of an internal combustion engines determined?

Chapter Twenty Two

GAS TURBINE PLANT

22.1. Basic Elements and Cycles of Gas Turbine Plants

Gas turbine plants (GTP) have found a wide application for driving electric generators in thermoelectric plants, for driving pumps and compressors in the main oil- and gas pipelines, in gas and oil indus-

try, in oil refinery and metallurgical works, in transport and other branches of national economy.

The basic elements of a GTP are a gas turbine, a compressor, and a combustion chamber. Besides the main elements, the layout of a GTP contains auxiliary equipment (regenerators, pumps, starting motor, etc.). The first steam-gas turbine was constructed by the Russian engineer P. D. Kuz'minskii in 1897.

GTP Cycles. Ideal cycles of gas turbine plants are the cycles with heat supply in the thermodynamic processes at constant pressure

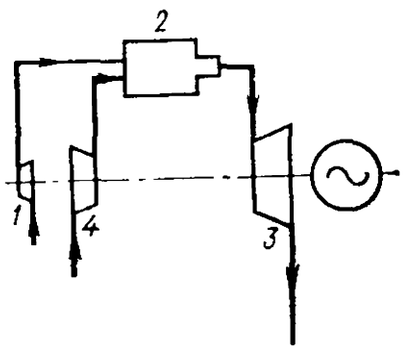

Fig. 130. Thermal layout of a gas turbine plant:
1—fuel pump; *2*—combustion chamber; *3*—gas turbine; *4*—air compressor.

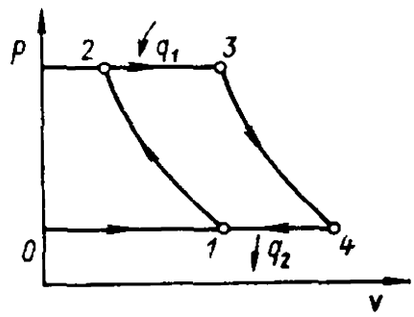

Fig. 131. GTP cycle with heat supply at constant pressure in the *p-v* coordinates.

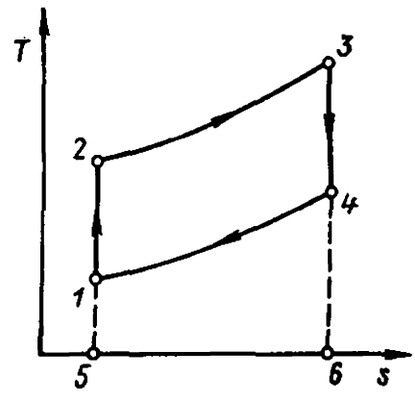

Fig. 132. GTP cycle with heat supply at constant pressure in the *T-s* coordinates.

and at constant volume. Figure 130 shows a thermal layout of a GTP with heat supply at constant pressure p. Gas turbine plants in which the combustion of fuel occurs in an open chamber under a constant pressure are called *constant-pressure combustion gas turbine plants.* This type of gas turbine plants is mainly used in industry.

Fuel is supplied to combustion chamber *2* by fuel pump *1* through special nozzle, and air is pumped by compressor *4*. In the combustion chamber, fuel burns at p = const. The combustion products are fed from the combustion chamber to the working blades of gas turbine *3*. Before being fed to the vanes, combustion products expand in the nozzle part and at the rotor blades. At the turbine outlet, gases are discharged into the atmosphere.

Figure 131 represents a cycle of a GTP with heat supply at p = const in the p-v coordinates. Gas is sucked into the compressor during the process described by curve *0-1*, and is adiabatically compressed during the process *1-2*. At a pressure p_2, gas is delivered from the compressor to the combustion chamber. During the process described by curve *2-3*, at p = const, the heat q_1 is supplied to the gas. Then the gas expands to pressure p_1 following adiabat *3-4*.

In the process *4-1* (at p = const), the heat q_2 is removed from the gas. The ratio $p_2/p_1 = \beta$ is called the *pressure ratio for the compressor*, and the ratio $v_3/v_2 = \rho$ is called the *isobaric expansion ratio.*

The amount of heat q_1 supplied to the cycle is given by

$$q_1 = c_p (T_3 - T_2).$$

The amount of heat q_2 removed from the cycle is

$$q_2 = c_p (T_4 - T_1).$$

The thermal efficiency for a GTP cycle with heat supply at p = const is

$$\eta_t = 1 - (q_2/q_1) = 1 - [c_p (T_4 - T_1)]/[c_p (T_3 - T_2)] = 1 - [(T_4 - T_1)/(T_3 - T_2)].$$

The temperatures T_2, T_3 and T_4 can be expressed in terms of T_1 through the relation between the parameters for the adiabatic process described by curve *1-2*:

$$T_2/T_1 = (p_2/p_1)^{(k-1)/k} = \beta^{(k-1)/k}, \text{ whence } T_2 = T_1\beta^{(k-1)/k}.$$

It follows from the relation between the parameters for the isobaric process described by curve *2-3* that

$$T_3/T_2 = v_3/v_2 = \rho; \quad T_3 = T_2\rho,$$

whence

$$T_3 = T_1\beta^{(k-1)/k}\rho.$$

From the relation between the parameters of the adiabatic process characterized by curve *3-4* it follows that

$$T_4/T_3 = (p_4/p_3)^{(k-1)/k} = (p_1/p_2)^{(k-1)/k} = (p_1/p_1\beta)^{(k-1)/k} = (1/\beta)^{(k-1)/k},$$

whence

$$T_4 = T_1\beta^{(k-1)/k}\rho\,(1/\beta)^{(k-1)/k} = T_1\rho.$$

Substituting the obtained values of the temperatures into the formula for the thermal efficiency of the cycle, we obtain

$$\eta_t = 1 - \left[\frac{(T_1\rho - T_1)}{(T_1\beta^{(k-1)/k}\rho - T_1\beta^{(k-1)/k})}\right] = 1 - \frac{\rho - 1}{\beta^{(k-1)/k}(\rho - 1)}$$

or

$$\eta_t = 1 - 1/\beta^{(k-1)/k}.$$

Obviously, the thermal efficiency of a cycle with heat supply at p = const depends on the pressure ratio β and the adiabatic exponent k. The thermal efficiency increases with β and k.

Figure 132 represents the cycle considered above in the T-s coordinates. The area $F_{5-2-3-6}$ is proportional to q_1, while the area $F_{5-1-4-6}$ is proportional to q_2. Then the thermal efficiency of the cycle is

$$\eta_t = (F_{5-2-3-6} - F_{5-1-4-6}/F_{5-2-3-6} = F_{1-2-3-4}/F_{5-2-3-6}.$$

Taking into account the irreversible losses in the thermocompressor and gas turbine, a GTP cycle with heat supply at p = const is represented in the T-s coordinates as is shown in Fig. 133. The real GTP cycle corresponds to the area $F_{1-2'-3-4'-1}$, where curve *1-2'* is the irreversible adiabat describing compression, while curve *3-4'*

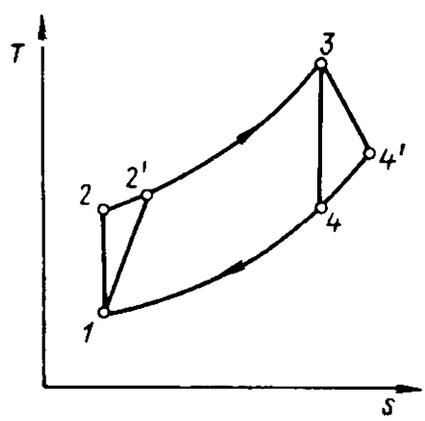

Fig. 133. A real GTP cycle with heat supply at constant pressure in the T-s coordinates.

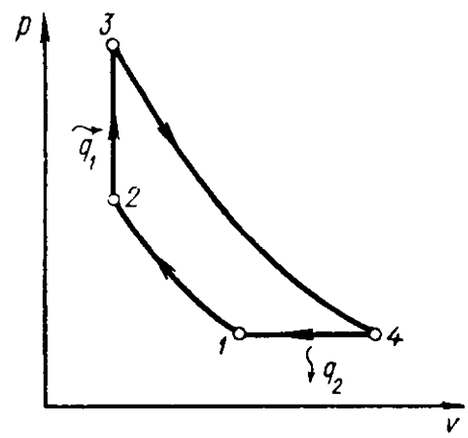

Fig. 134. GTP cycle with heat supply at constant volume in the p-v coordinates.

is the irreversible adiabat of expansion in the turbine. The theoretical cycle corresponds to the area $F_{1-2-3-4-1}$, as in Fig. 132.

The theoretical work of compression is $l^c_{ad} = i_2 - i_1$, while the actual work is $l^c_{ac} = i_{2'} - i_1$. The ratio $(i_2 - i_1)/(i_{2'} - i_1)$ is called the *adiabatic efficiency of the turbocompressor* and is denoted by η^c_{ad}. Its value ranges from 0.8 to 0.85.

The theoretical work of expansion of the gas in the turbine is $l^t_{theor} = i_3 - i_4$, while the actual work is given by $l^t_i = i_3 - i_{4'}$. The ratio $(i_3 - i_{4'})/(i_3 - i_4)$ is called the *internal relative efficiency of the gas turbine* and is denoted by η_{rel} (η_{rel} = 0.8-0.9).

The ratio of the usual work l_{us} to the amount of heat $q_{1\,us}$ taken in by the gas turbine plant is called the *effective efficiency of the plant*:

$$\eta_e = l_{us}/q_{1\,us} = [(i_3 - i_4)\,\eta_{rel}\eta_m - (i_2 - i_1)\,\eta^c_{ad}]/(i_3 - i_{2'}).$$

GTP Cycle with Heat Supply in the Isochoric Process (v = const). Figure 134 represents a GTP plant cycle with heat supply at v = const in the p-v coordinates. In this cycle, a gas having the initial parameters p_1, v_1, T_1 is compressed (adiabat *1-2*) to pressure p_2 (point *2*). The heat q_1 is supplied to the gas (isochor *2-3*). This is

followed by the expansion (adiabat *3-4*) and the return to the initial state (isobar *4-1*), accompanied by the removal of heat q_2.

In order to practically realize a cycle with heat supply at $v =$ const, the combustion chamber should be supplied with an inlet and an outlet valve. These valves are closed when fuel is supplied to the chamber and also during burning. Consequently, the gas volume in the process of combustion of the fuel remains unchanged ($v =$ const). After burning the fuel, the outlet valve is opened, and the combustion products are delivered through a nozzle to the rotor blades of the turbine.

The blowdown of the combustion chamber for removing the combustion products and filling it with fresh compressed air are carried out with open valves. By the end of the blowdown, the valves are consecutively closed, and the process is repeated. Thus, in a GTP operating in accordance with this cycle, the gas flow delivered to the rotor blades is of pulsed nature.

The ratio $p_2/p_1 = \beta$ is called the *pressure ratio for the compressor*, while the ratio $p_3/p_2 = \lambda$ characterizes *the additional increase in pressure*.

The supplied and removed heats q_1 and q_2 are given by

$$q_1 = c_v (T_3 - T_2),$$

$$q_2 = c_p (T_4 - T_1).$$

The thermal efficiency of the cycle is

$$\eta_t = 1 - (q_2/q_1) = 1 - [c_p (T_4 - T_1)]/[c_v (T_3 - T_2)]$$

$$= 1 - \frac{k (T_4 - T_1)}{T_3 - T_2}.$$

Expressing T_2, T_3 and T_4 in terms of T_1, we obtain for the adiabatic process

$$T_2/T_1 = (p_2/p_1)^{(k-1)/k} = \beta^{(k-1)/k}; \quad T_2 = T_1\beta^{(k-1)/k};$$

for the isochoric process corresponding to curve *2-3*

$$T_3/T_2 = p_3/p_2 = \lambda; \quad T_3 = T_2\lambda; \quad T_3 = T_1\beta^{(k-1)/k}\lambda;$$

for the adiabatic process described by curve *3-4*

$$T_4/T_3 = (p_4/p_3)^{(k-1)/k} = (p_1/p_1\beta\lambda)^{(k-1)/k} = 1\,(\beta\lambda)^{(k-1)/k};$$

$$T_4 = T_3\left(\frac{1}{\beta\lambda}\right)^{(k-1)/k} = T_1\beta^{(k-1)/k}\lambda\left(\frac{1}{\beta\lambda}\right)^{(k-1)/k}; \quad T_4 = T_1\lambda^{1/k}.$$

This gives

$$\eta_t = 1 - \frac{k (T_4 - T_1)}{T_3 - T_2} = 1 - \frac{k(T_1\lambda^{1/k} - T_1)}{T_1\beta^{(k-1)/k}\lambda - T_1\beta^{(k-1)/k}}$$

or $$\eta_t = 1 - \frac{k (\lambda^{1/k} - 1)}{\beta^{(k-1)/k} (\lambda - 1)}.$$

The efficiency of a GTP cycle with heat supply at v = const increases with k, β and λ. Gas turbine plants with constant volume of combustion chamber have not received wide recognition because of the negative effect of pulsed gas flow on the turbine wheel and unreliable operation of the valves at high temperature in the combustion chamber. Modern GTP's operate with the cycle where heat is supplied at constant pressure.

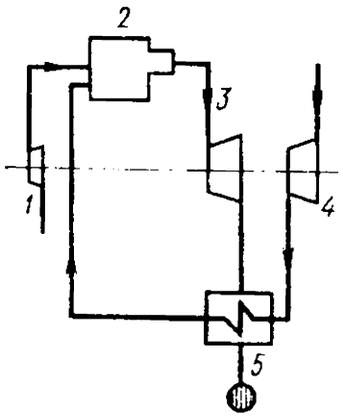

Fig. 135. Schematic diagram of a gas turbine plant with regenerative air heating:
1—fuel pump; *2*—combustion chamber; *3*—gas turbine; *4*—air compressor; *5*—regenerator.

The efficiency of simple open-cycle gas turbine plants with gas discharge to the atmosphere does not exceed 20%. The efficiency of gas turbine plants can be increased by using the regeneration of heat from waste gas. Regeneration consists in heating the air entering combustion chamber *2* of a GTP when the heat from waste gas is used (Fig. 135). After the compression in compressor *4*, air is delivered to regenerator *5* (gas-air heat exchanger of the shell-and-tube type) where it is heated as a result of a deeper cooling of waste gas. Air is heated in the regenerator and delivered to the combustion chamber. Thus, a smaller amount of fuel is required for attaining a given temperature of the gas at the outlet of the combustion chamber (i.e. before it enters the turbine).

22.2. Schematic Diagram of a Gas Turbine Plant

Gas turbine plants may operate in accordance with an open or closed cycle.

A gas turbine plant operating with an open cycle at a constant combustion pressure is shown in Fig. 136. A GTP is actuated by motor *1*. Liquid fuel is delivered into combustion chamber *5* by fuel pump *3* through nozzle *4* from tank *2*. Air required for combustion of the fuel is pumped to the combustion chamber by compressor *6*. The combustion products are sent through the nozzles to the rotor blades of turbine *7* which sets in motion the shaft of electrical generator *8*. If a gas fuel is utilized, a gas compressor is mounted instead of the fuel pump. The plant operates with an open cycle since the turbine discharges waste gas into the surrounding air.

Gas turbine is one of the main parts of a GTP. Gas turbine is a rotary heat engine whose working fluid is combustion products of a liquid or gaseous fuel. Sometimes gas turbines are called *internal*

combustion turbines in contrast to steam turbines operating on steam. Like steam turbines, gas turbines can be divided into impulse turbines and reaction turbines depending on the operating principle (see Figs. 115, 117). Turbines whose reactivity is 0.5 and higher are called *reaction turbines*. Turbines in which the gas moves along the longitudinal axis of the turbine spindle are called *axial-flow turbines* (Fig. 136).

Just as for steam turbines, pressure stages and velocity stages are distinguished for gas turbines. Multistage turbines (with several pressure and velocity stages) are employed when a large heat drop

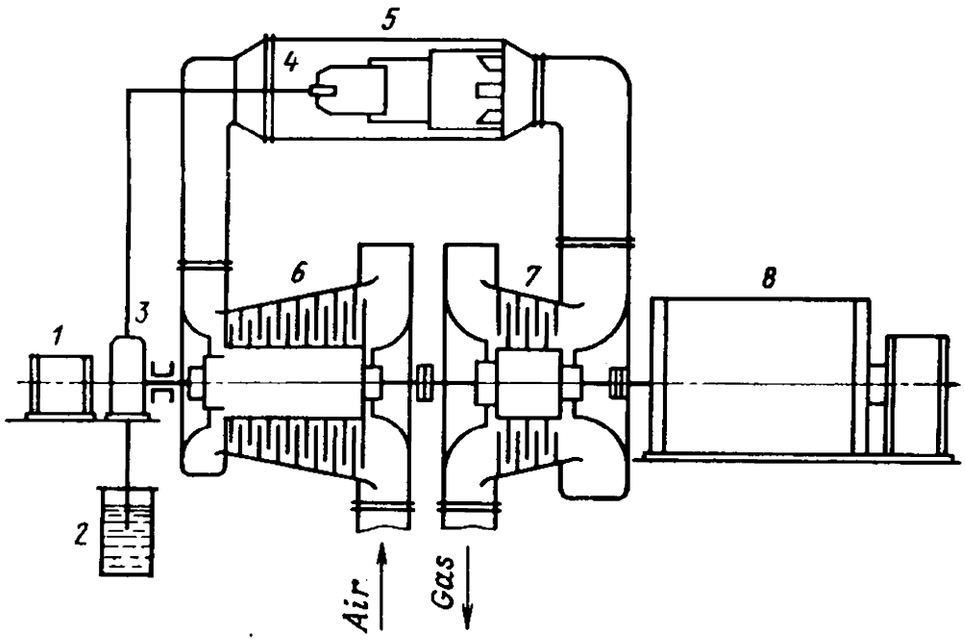

Fig. 136. Open-cycle GTP operating at constant combustion pressure: *1*—starting motor; *2*—tank; *3*—fuel pump; *4*—fuel nozzle; *5*—combustion chamber; *6*—compressor; *7*—gas turbine; *8*—electric generator.

is required. In each stage, only a part of the total heat drop takes place. Each stage in a multistage turbine consists of a nozzle and a wheel. Since velocity-stage turbines have lower efficiency than pressure-stage turbines, multistage turbines mainly employ pressure stages.

An axial-flow compressor is a reversed turbine. For this reason, axial-flow compressors are sometimes called *turbocompressors*. The pressure of air taken from the atmosphere is increased in turbocompressors to 0.6-0.8 MPa at the expense of mechanical work for driving the compressor. In other words, the pressure ratio can be increased to 8.

Axial-flow compressors are used for high-power GTP's. In gas turbine plants with power up to 300 kW, centrifugal compressors are employed, whose pressure ratio amounts to 3.5-6.5. The efficiency of turbocompressors reaches 88-90%. The efficiency of centrifugal compressors does not exceed 80-82%.

Combustion chambers of a GTP may be individual (remote) and built-in (sectional), cylindrical or annular in shape. Depending on the direction of motion of air and gas, these chambers may be direct-flow, reverse-flow or inclined-flow. A cylindrical combustion chamber is usually equipped with a single nozzle with mechanical or air-jet mechanical atomizer. The fuel is ignited at the start with the help of a special ignition device with spark or arc plugs. A direct-flow combustion chamber is shown in Fig. 137.

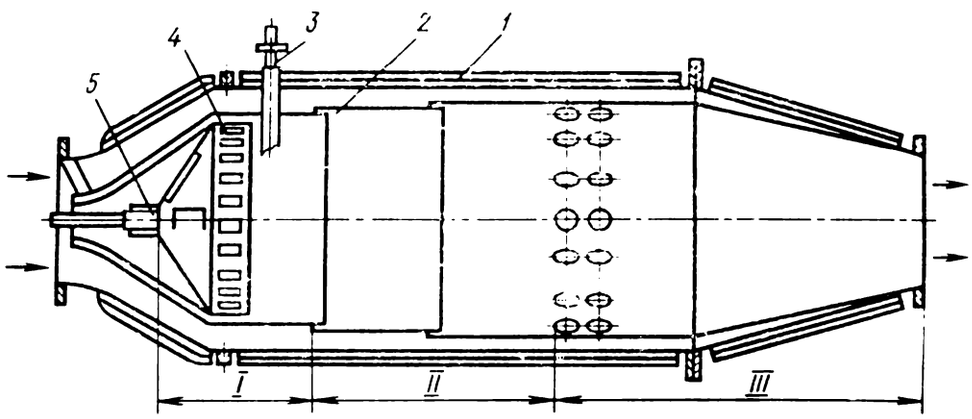

Fig. 137. Direct-flow combustion chamber:
1—shell; *2*—flame tube; *3*—spark plug; *4*—mixer; *5*—burner unit; *I*—preparatory zone; *II*—combustion zone; *III*—mixing zone.

A stable and complete combustion of fuel must be ensured in the combustion chamber for any operating conditions. The temperature field at the chamber outlet should be uniform, while the pressure loss in the combustion chamber should be minimum.

In order to prolong the life of a combustion chamber, it is fitted with longitudinal fins. The flame tube can be protected from high temperatures by air cooling. Air delivered to the combustion chamber is divided into two flows. The primary flow enters the combustion zone (inside the flame tube), while the secondary one flows over the outer surface of the flame tube. The gas temperature in the combustion zone reaches 1600-1900°C. The temperature of combustion products after mixing with the secondary air flow can be maintained at the level of 700-900 °C (or higher) depending on the specifications and duty of a GTP. The excess-air coefficient α for the combustion products at the outlet of the combustion chamber ranges from *3* to *8*.

22.3. Cycles of Jet Engines

One of the simplest jet engines is the air-jet engine. A ram-jet engine (Fig. 138) is a metallic tube with the front part in the shape of a diffuser (inlet channel). Its rare part is made in the form of an exhaust propulsive nozzle. The middle part of the tube serves as a combustion chamber. Air enters the engine through the front inlet, where it is

compressed. Due to compression, the air velocity decreases and the pressure increases. The higher the velocity, the higher the air pressure in the engine. Fuel is supplied to the combustion chamber through atomizers. The combustion products are discharged through the exhaust nozzle to the ambient. The working mixture is ignited with the help of the ignition system which is not shown on the diagram. Gases flowing into the atmosphere through the exhaust nozzle have a higher temperature than that of the air entering the engine.

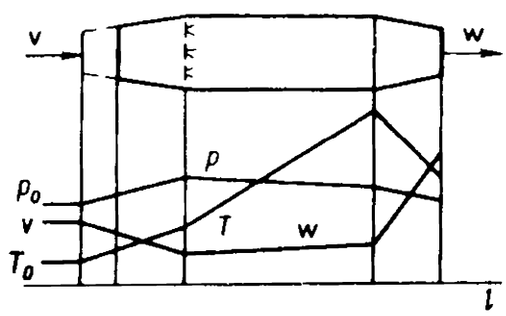

Fig. 138. Schematic diagram of ram-jet engine.

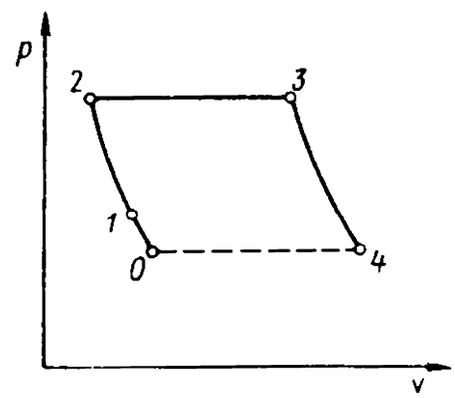

Fig. 139. Ideal cycle of a ram-jet engine.

The velocity w of the outflowing gas is higher than the air velocity v, which gives rise to a reactive force responsible for the motion of the engine. As the velocity increases, a larger amount of air passes through the engine, and the thrust of the engine increases. Direct flow engines can develop the thrust only during their motion and hence require a special starting device.

Figure 139 shows the changes in the state of a working fluid during an ideal process in a ram-jet engine. In the inlet region described by curve *0-2*, the air pressure increases. In the region corresponding to *2-3*, heat is supplied, and then the combustion products expand (region *3-4*). During the expansion of gases, the velocity of the outflow increases. The thermal efficiency of such a cycle is given by

$$\eta_t = 1 - 1/\beta^{(k-1)/k}.$$

The thermal efficiency of the cycle increases with pressure. The engine is actuated by a starting device which sets the turbine in motion and the compressor at the initial instant.

The schematic diagram of a turbo-compressor air-jet (turbojet) engine is shown in Fig. 140. The basic elements of the engine are the inlet part, the compressor, the combustion chamber, gas turbine and the propulsive nozzle. When the engine is in motion, air is compressed in the inlet part (region *0-1*) and its pressure increases to p_1. After that air is sent to the compressor where its pressure is increased further to p_2. Then air is delivered to the combustion chamber and mixed with the fuel injected through atomizers. The fuel-air mixture

is burnt, and the combustion products at pressure p_3 and temperature T_3 are directed to the gas turbine. A part of the energy of the gas flow is converted into the work of the gas turbine which puts the compressor into operation. Gases from the turbine flow to the propulsive nozzle and their pressure drops to p_5. At the nozzle outlet, the gas velocity v_5 is higher than the velocity of air entering the

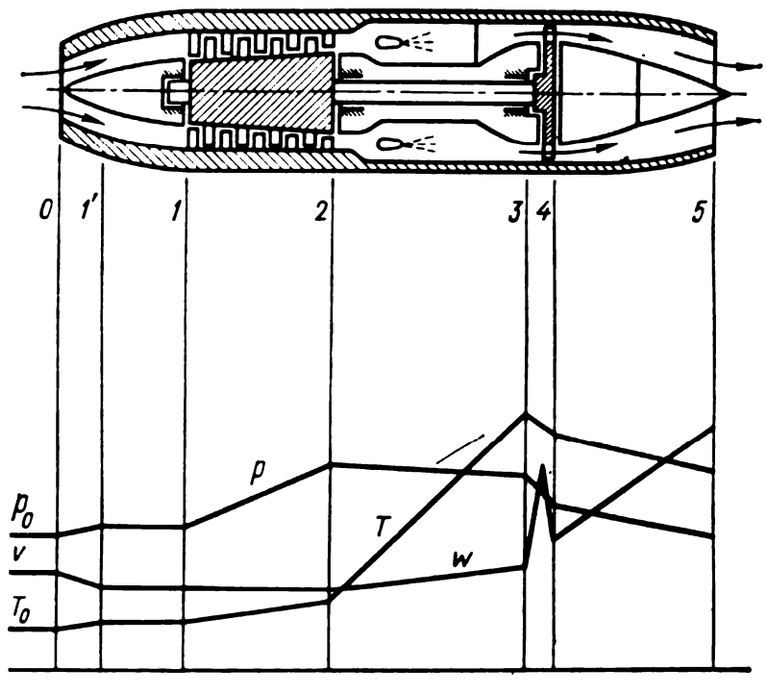

Fig. 140. Schematic diagram of a turbojet engine.

engine. The mass of the gas outflowing through the nozzle creates a reactive force whose direction is opposite to that of the gas flow.

At present, the engines in which a turbine develops a power higher than that required for driving the compressor are widely used. A part of the gas turbine power in such engines is transmitted to the propeller creating a thrust. Such engines are called *turboprop engines* and belong to jet-propulsion engines. The thrust in turboprop engines is caused by a propeller due to the reaction of the jet outflowing from the propulsive nozzle.

The jet engines operating on a solid propellant, as well as liquid-propellant rocket engines and pulsed air-jet engines are of great practical importance.

22.4. Fields of Application of Steam Turbine and Gas Turbine Plants

Steam turbine and gas turbine plants are used as driving engines in power engineering, gas and oil refining industry, at metallurgical plants, in transport, etc. Steam turbine units are dominating in modern power engineering. The main advantages of steam turbine

plants at the modern stage of the development of technology are the availability of the working fluids (water resources for generating steam are practically unlimited), the possibility to utilize any kind of organic fuel (solid, liquid or gaseous) as well as nuclear fuel, the possibility of constructing high-power units (at present, the power of operating steam turbine plants exceeds 1000 MW, and this does not exhaust the possibilities of this type of power plants), and comparatively high technical-and-economic indices. The efficiency of modern steam turbine plants has reached 40-41%. In prospect, the efficiency of steam turbine plants can be considerably increased by using heat-proof materials, which would permit to elevate the values of the initial steam pressure and temperature.

The main advantages of steam turbine plants also include the simplicity of their layouts. However, gas turbine plants with a simple layout (open cycle) have comparatively low technical-and-economic indices. The efficiency of such units amounts to only 16-20% for the initial temperature of the working fluid of about 700 °C.

The economical efficiency of gas turbine plants can be further increased by complicating their layout or by escalating the cost of a unit. According to calculations, the economical efficiency of a gas turbine plant can approach the economical efficiency of a steam turbine plant provided that the initial temperature increases to 1500 °C. This, however, can be achieved only by a considerable complication of the thermal layout and construction of the turbine itself (additional cooling of rotor blades), which reduces the competitiveness of gas turbine plants.

Gas turbine plants have a considerably lower single-unit power in comparison with steam turbine plants. The largest gas turbine has the power of 100 MW. Modern gas turbine plants operate on scarce kinds of fuel (liquid and gaseous). The utilization of a solid fuel in gas turbine plants leads to a complication of the layout and to an increase in the cost of the unit.

At the modern level of the development of science and technology, steam-gas power plants seem to be promising. The application of steam and gas turbines is not limited to power engineering. They are used in chemical and other branches of industry for driving high-power pumps and compressors. Gas turbines are also employed in road and railway transport and in other branches of national economy.

Test Questions

1. Where and for which purpose are gas turbines used?
2. Which formulas can be used for determining the efficiency of the cycle of a gas turbine plant with heat supply at p = const?

3. What do we call the effective efficiency of a gas turbine plant? How is it determined?
4. What is the efficiency of open-cycle gas turbine plants operating without heat regeneration?
5. What is the principle of heat regeneration? What economical effect does heat regeneration produce in gas turbine plants?
6. Explain the design and the operation of gas turbine plants.
7. Which merits of steam turbine plants determine their leading position in stationary power engineering?
8. What is the design of a ram-jet engine?
9. How is a ram-jet engine started?
10. Describe the design and operation of a turbo-jet engine.

Chapter Twenty Three

COMPRESSION OF GASES AND VAPOURS

23.1. Basic Concepts

The units intended for compressing gases and vapours are divided into compressors (compression pressure above 0.4 MPa), blowers (pressure 0.11-0.4 MPa), and fans (pressure below 0.11 MPa).

Compressors can be of piston or vane type. In piston (reciprocating) compressors, a gas is compressed in a cylinder with a piston. When a required pressure is attained, the gas is pushed (discharged) into a high-pressure tank or directly to the pipeline. Piston-type compressors are mainly used when a comparatively low capacity is required and have a high discharge pressure. Piston compressors also include rotary compressors in which volumetric compression is used as well as in piston-type compressors. Rotary compressors have rotating pistons.

Depending on the operation principle, vane compressors are divided into centrifugal and axial-flow compressors. In centrifugal compressors, gas moves during compression in the radial direction, while in axial-flow compressors, gas flows in the axial direction.

23.2. Basic Processes in a One-stage Piston Compressor

Let us consider the compression of atmospheric air in a one-stage piston compressor (Fig. 141). When piston *3* moves to the right, air in cylinder *4* is rarified. As a result, inlet valve *1* is opened, and the cylinder is filled with air. During the reverse motion of the piston, the inlet valve is closed, and air in the cylinder is compressed (process *1-2*). When the pressure in the cylinder becomes higher than the

discharge pressure p_d in the tank, discharge valve *2* is opened. Air is pushed by the piston from the cylinder (process *2-3*).

Since a certain volume (called the clearance volume V_0) always remains between the cylinder head and the bottom of the piston, a certain amount of air cannot be discharged into the tank. During the next stroke of the piston to the right, the discharge valve is closed under the action of the pressure of the gas in the tank. Air contained in the volume V_0 expands (process *3-4*). When the pressure in the cylinder becomes lower than the atmospheric pressure, the admission begins (process *4-1*).

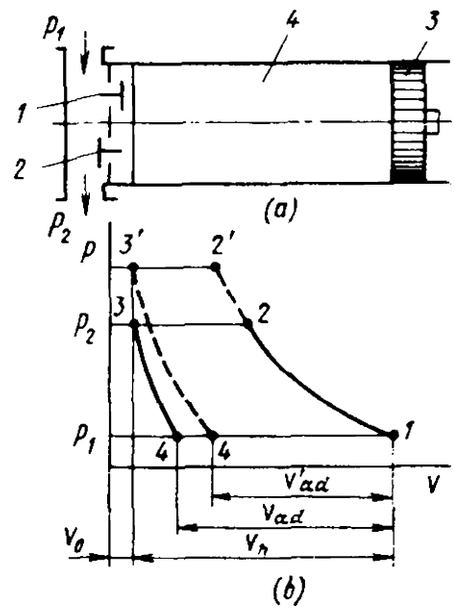

Fig. 141. One-stage piston compressor:
(*a*) schematic diagram; (*b*) working cycle in the *p-v* coordinates; *1*—inlet valve; *2*—discharge valve; *3*—piston; *4*—cylinder.

23.3. Basic Characteristics of a One-stage Piston Compressor

The pressure ratio $\beta = p_2/p_1$ in a compression stage is determined by the pressure in front of inlet valve *1* and behind discharge valve *2* of the compressor. The ratio of the clearance volume V_0 of the cylinder to its displacement (swept) volume V_h is called the *relative value of the clearance volume*, or *clearance volume coefficient*:

$$\sigma = V_0/V_h.$$

For piston compressors, $\sigma = 0.03\text{-}0.1$.

It follows from the diagram of a compressor operation that the admission occurs only in a part of the piston stroke. The ratio of the admission volume V_{ad} to the swept volume of the cylinder is called the *volume coefficient of a compressor*:

$$\lambda_0 = V_{ad}/V_h.$$

The volume coefficient depends on the relative value of the clearance volume and the pressure ratio $\beta = p_2/p_1$ of the compression stage. It follows from Fig. 141 (dashed line) that an increase in the discharge pressure leads to a decrease in the admission volume, and hence reduces the volume coefficient. Analytically, this can be expressed as follows:

$$\lambda_0 = 1 - \sigma\,(\beta^{1/n_p} - 1),$$

where n_p is the polytropic exponent for the expansion of the gas contained in the clearance volume.

For piston compressors, $\lambda = 0.8\text{-}0.95$. The actual capacity of a compressor is estimated by the feed coefficient λ_v, equal to the ratio of the volume V of the gas supplied to the compressor, corresponding to the physical conditions of the ambient, to the theoretical capacity V_{th} of the compressor:

$$\lambda_v = V/V_{th},$$

where $V_{th} = (\pi D^2/4)\, Sn$. The diameter D of the cylinder and stroke S of the piston are measured in meters; n represents the rpm of the shaft.

The feed coefficient λ_v is always less than λ_0 since it takes into account the air losses through piston rings and inlet valve during

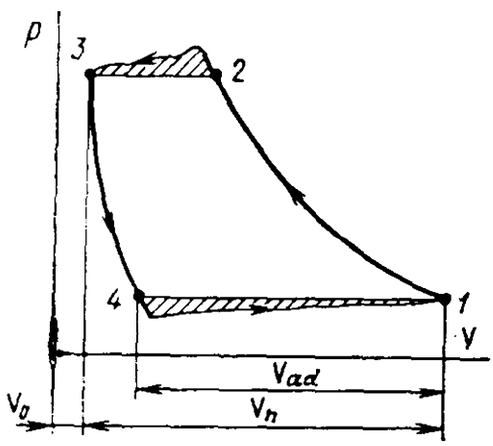

Fig. 142. Real working cycle of a compressor.

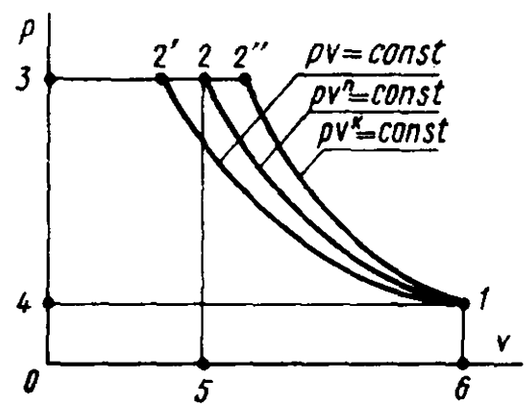

Fig. 143. Theoretical working cycle of a compressor without clearance volume.

compression and discharge, the pressure loss due to the resistance of the admission tract and air heating from the cylinder walls during admission. All these factors reduce the compressor capacity. Usually, $\lambda_v = (0.9\text{-}0.98)\, \lambda_0$.

Figure 142 shows the real working cycle of a compressor, which differs from the one shown in Fig. 141 in that there are additional hatched areas corresponding to the admission and discharge processes due to valve resistance. The inlet valve opens when the pressure in the cylinder is lower than the pressure p_1 in front of the inlet valve. For this reason, the line corresponding to the admission on the actual diagram of the processes in the compressor lies below the isobar p_1.

Gas is discharged from the cylinder through the outlet valve only when the pressure in the cylinder is higher than the pressure p_2 behind the discharge valve. Therefore, the discharge line lies above the isobar p_2.

The plot of actual processes occurring at the compression stage of a piston compressor is called the *indicator diagram* after the indicator that can be used for obtaining such a diagram for an operating compressor.

The indicator diagram of a compressor can be used for determining the indicated power spent for compression:

$$N_i = p_i V_h \, n,$$

where p_i is the mean indicated pressure determined with the help of the indicator diagram in the same way as for internal combustion engines or steam engines, V_h is the swept volume of the cylinder of the compressor, and n denotes the rpm of the compressor shaft.

The power supplied to the compressor shaft called an *effective power* is higher than the indicated power by the value of the losses due to friction in the compressor itself:

$$N_e = N_i/\eta_m,$$

where η_m is the mechanical efficiency of the compressor.

For piston compressors, $\eta_m = 0.8\text{-}0.95$. The work spent for air compression can be determined from the diagram of the working cycles of a compressor (without clearance volume and valve resistance). Figure 143 depicts such a process in the p-v coordinates. The nature of compression depends on the degree of cooling the air in the cylinder during compression. With an ideal cooling, it is theoretically possible to obtain an isothermal compression with a minimal work expenditures (*1-2'*). If the compression occurs without heat transfer with the cylinder walls, we obtain an adiabatic process *1-2"*. The actual compression proceeds along polytrop *1-2* with the polytropic exponent n ($n = 1.25\text{-}1.35$). Figure 143 shows that the work for gas compression is equal to the available work. The available work of compression is negative. However, the work of compression in a compressor is determined by the absolute value. The work L_{is} of isothermal compression is numerically equal to the area $F_{4\text{-}1\text{-}2'\text{-}3\text{-}4}$:

$$L_{is} = mRT_1 \ln \beta = p_1 V_1 \ln \beta,$$

where $V_1 = mv_1$ is the total volume of the sucked-in air in m^3/s.

For adiabatic compression, L_{ad} corresponds to the area $F_{4\text{-}1\text{-}2''\text{-}3\text{-}4}$. The work of compression is given by

$$L_{ad} = [k/(k-1)]mRT_1 \, (\beta^{(k-1)/k} - 1) = [k/(k-1)] \, p_1 V_1 \times (\beta^{(k-1)/k} - 1).$$

The theoretical efficiency used up by a compressor is

$$N_c = L,$$

where L is the work of compression.

The effective power of air compression is less than the theoretical value:

$$N = N_{is}/\eta_{is}\eta_m = N_{ad}/\eta_{ad}\eta_m,$$

where η_{is} and η_{ad} are the isothermal and adiabatic efficiencies of a compressor, and η_m is its mechanical efficiency.

For piston compressors, $\eta_{is} = 0.6\text{-}0.85$ and $\eta_{ad} = 0.7\text{-}0.93$.

23.4. Multi-stage Compression in a Piston Compressor

An increase in pressure in one compression stage is limited by a decrease in λ_0 and an increase in the temperature of compressed gas which usually does not exceed 150-160 °C. Consequently, β_{st} for a compression stage usually does not exceed 8-10 for small-scale

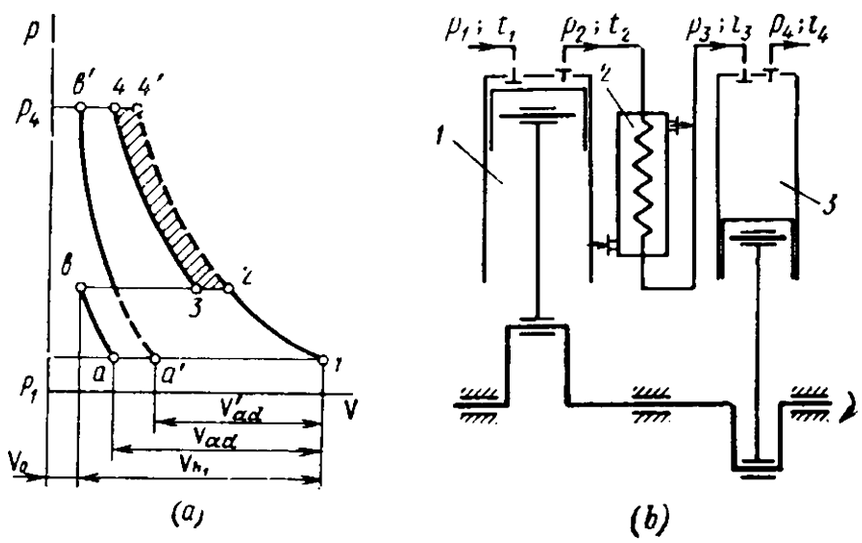

Fig. 144. Two-stage piston compressor:
(*a*) working cycle; (*b*) schematic diagram; *1*—low-pressure cylinder; *2*—cooler; *3*—high-pressure cylinder.

compressors with good cooling and 6-8 for large-scale compressors. For attaining a more economical operation, it is desirable to reduce β_{st} to still smaller values. Therefore, even for $\beta = 7\text{-}8$, two-stage compression is employed. In chemical technology, gases in many processes should be compressed to a very high pressure. In such cases, multistage compressors are used.

With a multistage compression, the gas from low-pressure cylinder *1* is cooled in the so-called intermediate cooler *2* before entering the next stage (high-pressure cylinder *3*). This reduces the work of compression in the next stage. Figure 144*a* shows the process of two-stage compression with intermediate cooling in the *p-v* coordinates. The hatched region corresponds to the reduction of the work of compression during gas cooling in the intermediate cooler, during which the gas volume decreases from V_2 to V_3.

The dashed line represents one-stage compression to the final pressure $p_{4'}$. The graph shows that in the case of two-stage compression, the volume coefficient λ_0 of the compressor is higher than in one-stage compression ($V_{ad} > V'_{ad}$). The overall pressure ratio for a multi-stage compression is determined by the pressure ratios at individual stages:

$$\beta = \beta_{I}\beta_{II} \ldots \beta_n,$$

where n is the number of compression stages.

When the pressure ratios in different stages are equal (which is the necessary condition for obtaining the minimal work of compression), we obtain

$$\beta = \beta_{st}^n.$$

Hence the pressure ratio for one stage is given by

$$\beta_{st} = \sqrt[n]{\beta}.$$

For example, if we have a two-stage compressor with intermediate cooling, and the required pressure is 0.9 MPa, the pressure ratio for one stage is

$$\beta_{I} = \beta_{II} = \sqrt{\frac{0.9}{0.1}} = 3.$$

Consequently, air is compressed in the first stage from 0.1 to 0.3 MPa, and in the second stage, from 0.3 to 0.9 MPa.

If the required overall pressure ratio is known for a multistage compressor, and the admissible pressure ratio β_{st} for a single stage is chosen, the number of compression stages of the compressor is given by

$$n = \log \beta / \log \beta_{st}.$$

The power of the drive for a multistage compressor is determined by the total work of compression which is the sum of the works of individual stages. If the values of β_{st} and the temperatures corresponding to the beginning of compression for different stages are equal (this can be attained by cooling the gas being compressed in intermediate coolers), the works of compression at individual stages will be identical.

Figure 144*b* shows the diagram of a two-stage compressor with an intermediate cooler.

23.5. Rotary Compressors (Blowers)

At a low pressure of compressed air, two-rotor blowers are widely used (Fig. 145). The blowers may have two or three blades (Fig. 145*a* and *b*).

Two-rotor blowers operate without friction between the rotors and the shell. The gap between the rotors and between the rotors and the shell is of the order of hundredths of a millimetre. The synchronous rotation of the rotors is ensured by synchronized gears mounted on their shafts. The speed of rotation of the balanced rotors may reach 10 000 rpm. In order to ensure uniform admission and supply of air to the compression system, rotors are made helical

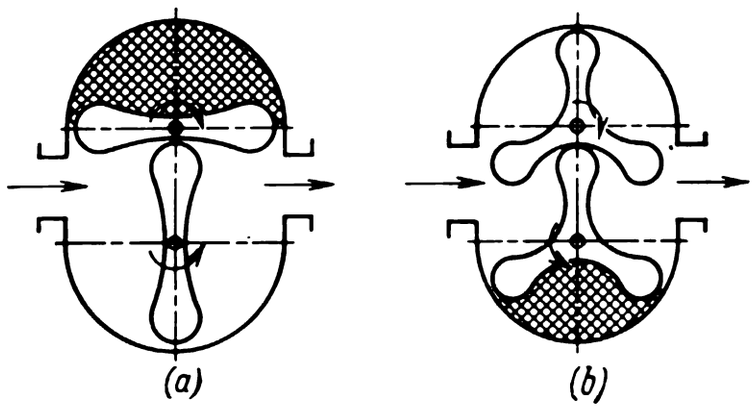

Fig. 145. Two-rotor blowers:
(*a*) with two blades; (*b*) with three blades.

in shape or the inlet and outlet ports are made oblique. In two-rotor blowers, air is compressed in the discharging stage which starts from the moment when the air transported by the rotors (hatched region) reaches the discharge air duct.

Unlike piston and vane blowers, the blowers considered above are called displacement blowers. Two-rotor blowers are widely used for scavenging and boosting internal combustion engines. The efficiency of rotor blowers is $\eta_v = 0.75\text{-}0.85$. The mechanical efficiency varies from 0.9 to 0.95. Rotary compressors cannot be used for compressing air to above 0.4 MPa because of the gaps between the rotors and between the rotors and the shell. This type of compressors is normally used for lower discharge pressures.

Two-stage rotary compressors can be also made. For sealing the gaps in some designs, oil is injected with the taken-in gas with its subsequent separation from the compressed gas with the help of cyclone or other oil traps. Such compressors make it possible to obtain discharge pressure up to 0.8-1.0 MPa.

23.6. Vane Compressors

Vane compressors or turbo-compressors are used for obtaining large volumes of compressed air. They can be divided into centrifugal (Fig. 146) and axial-flow compressors. The main parts of a centrifugal compressor are the inlet part *1* with nozzles, impeller *2* with blades, diffuser *3* and the outlet chamber *4* (for multistage compression, rotary chamber).

The operating principle of a centrifugal compressor consists in that air contained in the channels between the vanes is forced to the outer rim of the wheel and is compressed by the force resulting from the rotation of the impeller. Consequently, a so-called *static head* is created. When air passes from the smaller inner diameter to the larger outer diameter, the velocity of its flow increases. From the impeller, air enters the fixed diffuser *3*, where the intervane

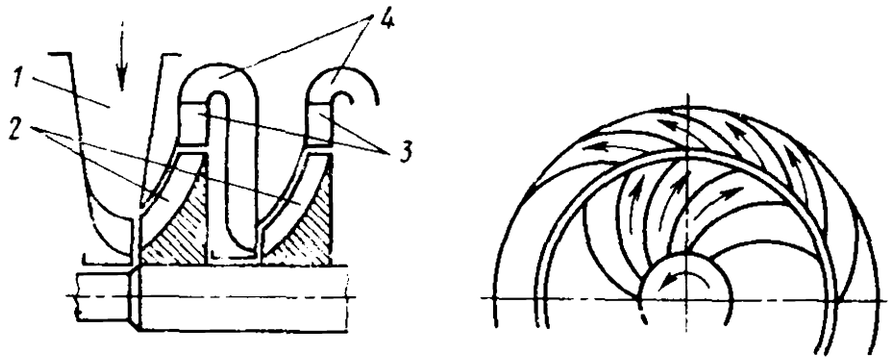

Fig. 146. Schematic diagram of a centrifugal compressor:
1—inlet part; *2*—impeller; *3*—diffuser; *4*—chamber.

channels become wider. Consequently, air pressure in the vane compressor increases both on the impeller and in the diffuser.

A one-stage centrifugal compressor may create the pressure ratio β_{st} up to 3-4 and has the efficiency from 0.70 to 0.85. The higher the

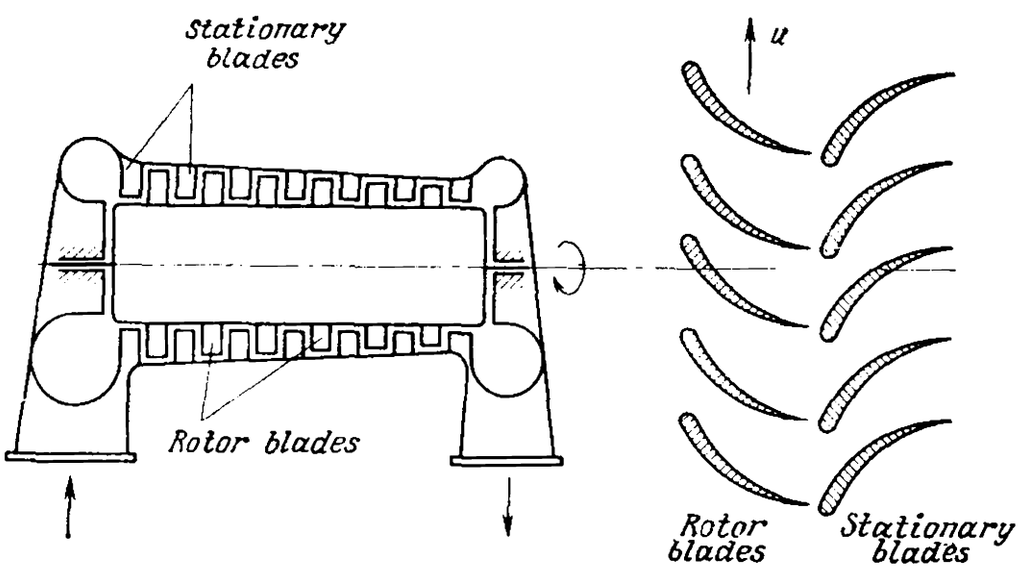

Fig. 147. Schematic diagram of an axial-flow compressor.

peripheral speed of the compressor impeller, the larger β_{st}. The values of the peripheral speed may attain 200-300 m/s (in special cases, 500 m/s). The so-called axial-flow multistage compressors (Fig. 147) may have rather high values of the efficiency.

Mechanical energy supplied to a compressor is spent for increasing the flow velocity, i.e. the kinetic energy of air in the intervane chan-

nels. The conversion of the kinetic energy of air into potential energy occurs in the expanding ducts between stationary vanes which simultaneously serve for a shockless air supply to the vanes of the next stage. Axial-flow compressors have smaller pressure ratios than centrifugal ones: $\beta_{st} = 1.15\text{-}1.25$. However, the efficiency of these compressors attains 0.9.

As the capacity of a vane compressor decreases, the air pressure (head) increases to a certain maximum value. A further decrease in the capacity first leads to a decrease in the compressed air pressure, followed by the so-called stalling and surging, i.e. the process of vortex air flow over the vanes with air jet separation from the vane surface. This phenomenon is accompanied by a strong noise and air shocks in compressors. This causes an abrupt decrease in the compressor capacity. Such a regime is inadmissible.

23.7. Fans

Centrifugal (Fig. 148) and axial-flow (Fig. 149) fans are used for delivering large amounts of air at a low head. Centrifugal fans operate with an axial air flow to impeller *1* and a radial flow at the outlet.

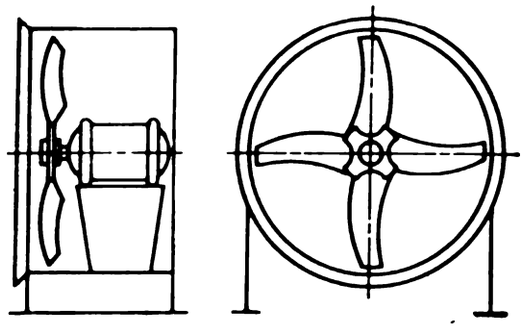

Fig. 148. Schematic diagram of a centrifugal fan.

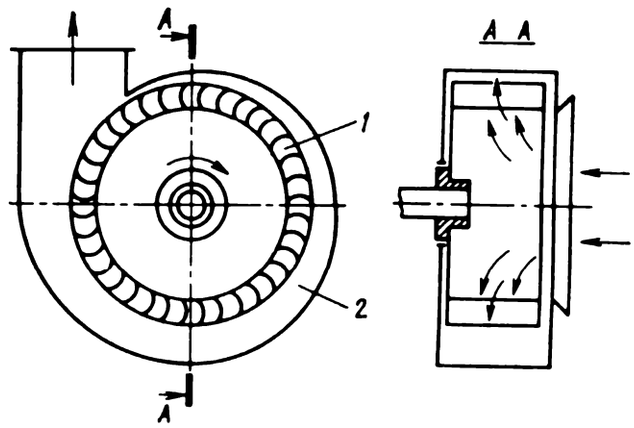

Fig. 149. Schematic diagram of an axial-flow fan:
1—impeller; *2*—scroll.

The operation principle of centrifugal fans is the same as for centrifugal compressors. However, they are not supplied with a vaned diffuser. The role of a diffuser is played by the so-called scroll *2*, viz. an expanding duct formed by the outer surface of the rotating impeller and the shell (casing) of the fan. The impeller blades can be curved forward, radial or curved backward depending on the required head. Fans with forward-curved blades (relative to the direction of rotation of the impeller) may develop a higher head than hose with backward-curved blades, but the former have a lower efficiency.

The head created by a fan is the sum of the static head H_{st} and the dynamic head $H_d = c^2/2g$.

The pressure generated by a fan is given by

$$p = \rho g H,$$

where g is the free-fall acceleration and ρ is the air density.

The power demand of a fan is

$$N = pQ/\eta_f,$$

where Q is the fan capacity and η_f is its efficiency.

The maximum fan capacity corresponds to the zero head. As the capacity decreases, the head produced by the fan rises to a certain maximum value. A further decrease in the capacity is not allowed since it may lead to stalling and surging.

Axial-flow fans at low heads are mainly used for ventilation. The choice of a fan, be it centrifugal or of axial-flow type, is ultimately made according to the technical data.

Test Questions

1. How are the systems for compressing gas and steam classified according to the value of compression pressure?
2. Which processes occur in a piston compressor? What is their sequence?
3. What do we call the volume coefficient of a compressor? Which parameters determine this coefficient?
4. How is the feed coefficient of a compressor defined? What is the difference between the feed coefficient and the volume coefficient?
5. How is the indicated power of a compressor determined?
6. In which cases is multistage compression used?
7. How is the pressure ratio in compression stages of a multistage compressor determined?
8. How can the required number of stages for a compressor be determined from the known overall pressure ratio and the admissible pressure ratio for one compression stage?
9. What are the fields of application of vane compressors?
10. Which type of vane compressors (centrifugal or axial-flow) has a higher pressure ratio in one stage?
11. What is the relation between the capacity and discharge pressure for vane compressors?
12. Describe the operating principle of centrifugal and axial-flow fans.

Chapter Twenty Four

DEVELOPMENT OF MODERN THERMAL POWER PLANTS

24.1. Steam-gas Power Plants

One of the main tasks of modern power engineering is to increase their commercial efficiency. Steam turbine power plants with super-high parameters made it possible to attain the efficiency of 40-41%. However, for constructing such units, expensive heat-resisting high-strength materials are required. A further increase in the commercial efficiency can be obtained by using new principles of generation and transformation of energy as well as by combining the available cycles and units. In steam-gas plants, the steam and gas cycles are combined.

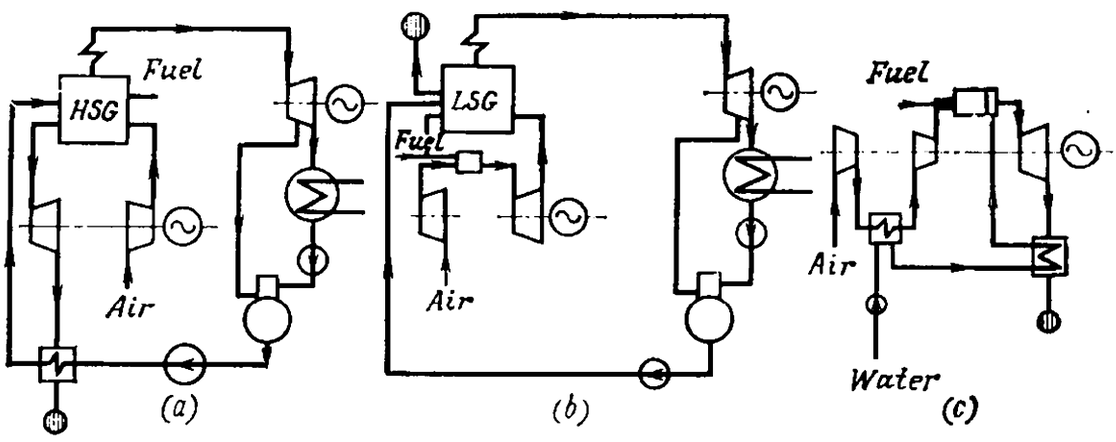

Fig. 150. Schematic diagrams of steam-gas power plants:
(*a*) with high-head steam generator; (*b*) with gas discharge into a low-head steam generator; (*c*) operation on a steam-gas mixture.

This allows us to take advantage of the main thermodynamic properties of the gas cycle, viz., the high initial temperature of the working fluid (t_1 = 750-800 °C) and the low temperature of the working fluid at the end of the cycle (t_2 = 25-30 °C). Steam-gas plants may employ high-head steam generators, gas discharge from the gas turbine plant into the furnace of a low-head (ordinary) steam generator, or gas turbines operating on a steam-gas mixture (Fig. 150).

Depending on the initial and final values of gas and steam parameters, as well as on the temperature of the ambient, the power of the gas-turbine part of a steam-gas plant ranges between 15 and 36% of the indicated power of steam plants. In comparison with steam turbine plants, such units make it possible to reduce the initial investment and metal consumption by 25-30% and ensure fuel saving. A high-head steam generator operates with an excess pressure in the furnace. Combustion and heat-transfer processes occur with

a maximum efficiency since overall dimensions of a high-head generator are 2-3 times smaller than those of low-head (ordinary) steam generators.

Other conditions being equal, the fuel saving in gas-steam plants with a gas discharge to the furnaces of a low-head generator are smaller than in steam-gas plants with a high-head steam generator. The latter can utilize solid fuel and permit separate performance of steam and gas turbines. In the USSR, several steam-gas plants with a high-head steam generator are in operation with the output power reaching 200 MW.

On the basis of steam-gas plants with a high-head steam generator, electric power and engineering plants have been constructed, in which the production of electric energy and heat is combined with the obtaining of chemical products. The latter can be treated as by-products whose obtaining does not involve any additional investment. An example of such a plant is the one intended for the production of electric energy and nitrogen oxides. Nitrogen oxides are obtained during the combustion of fuel at high temperatures. At the flame temperature of 2500 °C and the cooling rate of 250 000 deg/s, the concentration of nitrogen oxides in a gas amounts to 2%. A high gas temperature in a high-head steam generator can be attained by introducing oxygen into the air supplied to the furnace or by air preheating to 1200-1500 °C. A rapid cooling of combustion products to 1500 °C occurs in convective-evaporating gas ducts of the steam generator. The addition of oxygen is required to intensify the nitrogen oxidation reaction and to increase the concentration of oxides in the combustion products. The equipment intended for obtaining nitric acid is mounted in the gas duct between the steam generator and the gas turbine.

The efficiency of a steam-gas block of 225 MW power may reach 40%. The capacity of electric and industrial steam-gas plant for obtaining nitric acid attains 15 tons per hour for the gas temperature of 750 °C in front of steam generator and air rate of 720 tons per hour in the gas turbine unit. The manufacturing cost of nitric oxide obtained in such a system may be lower than that at the existing plants with a contact oxidation of ammonia.

Electric and industrial plants have wide prospects for obtaining nitrogen-hydrogen mixture which is the initial product in the production of nitric acid, nitrogen fertilizers or hydrogen required for obtaining synthetic hydrocarbons. The combustion products having a temperature of 1600 °C are delivered to a pipe converter whose heat-proof material pipes (d = 110 mm) are filled with a catalyst. At a temperature of 750-800 °C, the hydrogen concentration in the converted gas amounts to 50-60%. Besides, the converted gas contains up to 25% of carbonic acid which is used for hydrocarbon syn-

thesis. Power and industrial units with steam-gas plants are employed for obtaining ammonia from methane.

Steam-gas plants can be used in thermoelectric plants of oil refinery for the conversion of oil gases (obtained in oil refining) and steam. Hydrogen liberated in this case is used for extracting sulphur from oil in obtaining low-sulphur residual oil.

24.2. Atomic Plants

Atomic power plants (APP) operate on nuclear fuel (uranium or plutonium isotopes) as a source of energy. A controlled fission reaction in a fuel takes place in a reactor. Nuclear fission is accompanied by the liberation of heat which is removed from the active zone of

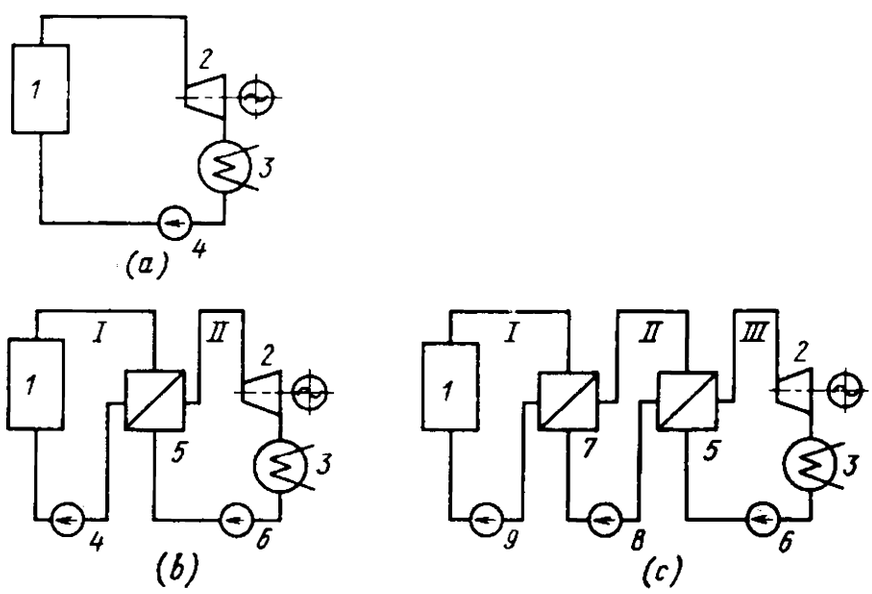

Fig. 151. Schematic diagram of an atomic power plant:
(*a*) one-loop plant; (*b*) two-loop plant; (*c*) three-loop plant; *1*—reactor; *2*—turbine; *3*—condenser; *4*—pump; *5*—steam generator; *6*—condensate pump; *7*—heat exchanger; *8*—second loop pump; *9*—first loop pump.

the reactor by a heat-transfer agent and is used for producing electric energy. Atomic power plants may operate with a steam-turbine or gas-turbine cycle.

At present, atomic power plants with steam-turbine cycle have found the widest application. Steam-turbine APP's differ from one another in the type of reactor, heat-transfer agent, thermal layout, and so on. The thermal layout of an APP may have one, two or three loops. In a *one-loop system*, a heat-transfer agent (water) serves as a working fluid of the steam-power cycle. In reactor *1* (Fig. 151*a*), water is heated and steam is generated. Then steam is sent to turbine *2*. After steam expansion in the turbine and its condensation in condenser *3*, water is again fed to the active zone of the reactor by pump *4*. The one-loop system is very simple. However, steam

produced directly in the reactor is radioactive. For this reason, a special equipment is required for such reactors, which makes the maintenance of one-loop APP's too complicated. In one-loop systems, the loops of the heat-transfer agent and the working substance coincide.

If the loops of the heat-transfer agent and the working fluid are separated (independent), we have a *two-loop system* (Fig. 151*b*). The first loop (I) corresponds to the heat-transfer agent and the second loop (II) to the working fluid. Pump *4* contained in the first loop pumps the heat-transfer agent through the reactor and steam generator connected in series. In this case, steam generator *5* is a unit for the transfer of heat energy from the first loop to the second one. In the second loop, steam is produced in steam generator. Expanding in the turbine, the steam sets the rotor of an electric generator in motion. After leaving the turbine, steam is condensed and is again sent to the steam generator by pump *6* contained in the second loop. The maintenance of the equipment of the second loop is not as complicated as for a single loop since radioactive materials do not appear in it. Sometimes, fused sodium is used as a heat-transfer agent (for cooling the reactor). This makes it possible to reduce the pressure of the medium in the primary loop and at the same time to increase the pressure and temperature of steam in front of the turbine. In this case, *three-loop systems* are used (Fig. 151*c*). An intermediate loop II is placed between loop I and loop III of the working fluid in the steam-power cycle. Liquid sodium circulating in the second loop is not radioactive. Such a precaution is required in order to prevent the contact between radioactive sodium and water in the case of a damage in the hermiticity of the first loop. In analogy with steam power plants, atomic power plants may be of a purely condenser type, intended only for the production of electric energy, or of thermoelectric type.

Figure 152 shows a thermal layout of the first atomic power plant put into operation in 1954 in the USSR. Nuclear reactor *1* is a thick-walled concrete block containing uranium rods (nuclear fuel), a cadmium regulator of the chain reaction and a graphite block for slowing down and reflection of neutrons. During the "burning" of uranium, a large amount of heat is liberated in the reactor (the amount of heat liberated upon a complete decomposition of 1 kg of uranium during fission reaction is equal to 21×10^6 kcal, which is equivalent to 3000 t of coal). Water for the reactor cooling is pumped by pump *16* through technological channels under the pressure of 10 MPa and is heated from 190 to 260-275 °C.

The steam generator consists of water heater *4*, evaporator *3* and steam superheater *2*. The water flow cooling the reactor forms the primary loop, while steam-water flow (through a condenser, steam generator and turbine) forms the secondary loop. Steam obtained

in the steam generator is fed to turbine *6* which sets in motion electric generator *7*, whose power is 5000 kW.

The condensate of waste steam is delivered from condenser *8* by condensate pump *9* to feed tank *11*, from which it is pumped to the steam generator by feed pumps *13*.

In order to start operation and level out the loads of the nuclear reactor, condenser *5* with condensate pump *10* are connected in parallel with the turbine in the secondary loop. Pumps *12* are intended for water supply of the condensers.

The thermal layout of an atomic power plant also contains pressurizer *17* for water in the primary loop. Pressure is maintained in

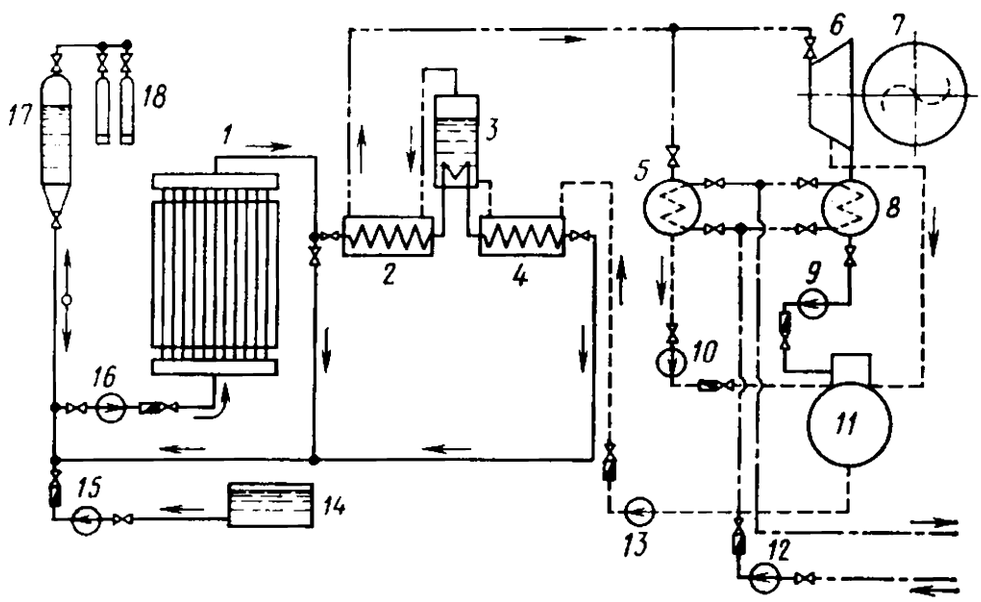

Fig. 152. Schematic diagram of the first APP:
1—reactor; *2*—steam superheater; *3*—evaporator; *4*—water heater; *5*, *8*—condensers; *6*—turbine; *7*—generator; *9*. *10*, *12*, *13*, *15*, *16*—pumps; *11*, *14*—tanks; *17*—pressurizer; *18*—gas cylinders.

it with the help of gas cylinders *18*. Tank *14* is intended for compensating water losses in the primary loop with the help of pump *15*.

Some organic fluids (for example, CO_2) can be used in an APP as heat-transfer agents.

At present, a considerable increase has been observed in the capacity of atomic power plants which are tipped to occupy a leading place in the world power industry. The first atomic power plant in the world was constructed in the USSR in June 1954. In Great Britain, the first atomic power plant was commissioned in 1956, and in USA in 1957. By the end of 1982, atomic power plants were operating in 24 countries. The total rated capacity of atomic power plants in the world was 180 000 MW. At present nuclear power forms the basis of the increase in the power potential in all countries. Table 6 gives the production of atomic power in per cent of the total power generated in some countries.

Table 6

Country	UK	USA	FRG	Japan	France
Power generated in 1980	9	10.7	12.3	13.3	25
Power forecast for 2000	35	35	43	35	70

In 1980, the electric power generated at atomic power plants in the USSR amounted to 5.6% of the total electric energy generated in different ways. According to the plans for the development of national economy, this figure is expected to rise to 14.2% in 1985.

According to the forecasts made by the scientists, the fraction of nuclear power generated in the world in 2000 will constitute some 25-30% (up to 40% by some estimates) of the total electricity generated. According to the data published by the World Energy Conference, the rated power of atomic power plants in 2000 will reach 900 million kW.

At present, atomic energy is used not only for generating electricity, but also for district heating. Atomic heat generation is possible in atomic thermal power plants or in special atomic heating plants.

The need to restructure the fuel-energy balance, taking into account maximum economy of petroleum or gas, will inevitably lead in future to the increased use of atomic energy not only for generating electric power and heat, but also for use in technological processes. One of the most important prospects of using atomic energy for technological purposes is the generation of cheap hydrogen. In the near future, nuclear power will occupy a leading role in the large-scale production of methanol, ammonia, fertilizers and other chemical products. Nuclear power will be widely used for processing coal with a view to obtain hydrocarbon products in liquid or gaseous phase. High-temperature reactors will be used in metallurgical industry for direct reduction of iron from the ore, as well as in many other technological processes of modern industry.

24.3. Method of Direct Conversion of Thermal and Chemical Energy into Electric Energy

Among all possible methods of direct conversion of thermal energy into electric energy, the best studied are the magnetohydrodynamic, thermionic, and thermoelectric methods.

Magnetohydrodynamic (MHD) and Electrogasdynamic (EGD) Generators. The conversion of heat into electric energy in MHD units is based on the interaction between an ionized gas or liquid-metal flow (conducting medium) and a magnetic field. If a conducting medium intersects the magnetic field lines, an e.m.f. is induced in it. Depending on the way in which energy is removed from the conducting medium flow, MHD generators are divided into conductive (with electrodes) and inductive (without them). Figure 153 presents

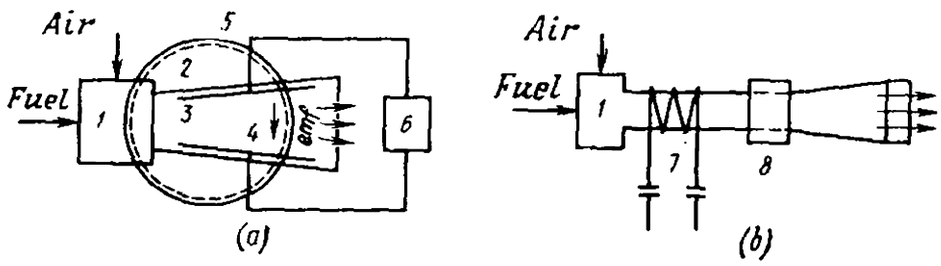

Fig. 153. Schematic diagram of MHD generators:
(*a*) conductive; (*b*) inductive; *1*—combustion chamber; *2*—nozzle; *3*—cathode; *4*—anode; *5*—magnetic field generating coil; *6*—load; *7*—self-excited a.c. generator; *8*—silencer.

schematic diagrams of MHD generators of conductive and inductive types. A conductive MHD generator produces a direct current which can subsequently be transformed into alternating current. Inductive MHD generators, which are less studied, produce alternating current. In order to increase electric conductivity of a gas flow, alkali metals are used as additives. The temperature of conducting medium at the entrance of the channel should be maintained at 2000-3000 °C. At the exit from the channel of the MHD generator, the temperature drops only to 1700-2000 °C. Consequently, the efficiency of the cycle of an MHD generator itself is low. In order to elevate the efficiency of energy sources, an MHD generator is combined with a steam-turbine (or gas-turbine) plant. The net efficiency of such a combined unit is given by

$$\eta_{net} = \eta_{MHDG} + (1 - \eta_{MHDG})\,\eta_{STP},$$

where η_{MHDG} and η_{STP} are the efficiencies of the MHD generator and the steam turbine plant.

If $\eta_{MHDG} = 15\%$ and $\eta_{STP} = 40\%$, the efficiency of the combined unit will be 49%.

A large program for investigating processes in an MHD generator was realized in the USSR on the У-02 unit whose power was 200 kW. A 25 MW pilot plant У-25 has been constructed. The efficiency of MHD units combined with high-temperature gas-cooled reactors of atomic power plants and gas-turbine plant operating with a closed cycle on helium or argon is under investigation.

In an electrogasdynamic generator, electromotive force is induced as a result of interaction of an ionized gas flow (conducting medium) and an electric field.

Figure 154 shows the layout of an MHD pilot plant У-25. Oxygen-enriched air preheated in Cowper stove *3* is fed by blower *2* from air-separation unit *1* to combustion chamber *5*. Additive-injection system *4* is intended for air ionization. Combustion products at a high temperature are sent to the duct of MHD generator *6* and then to

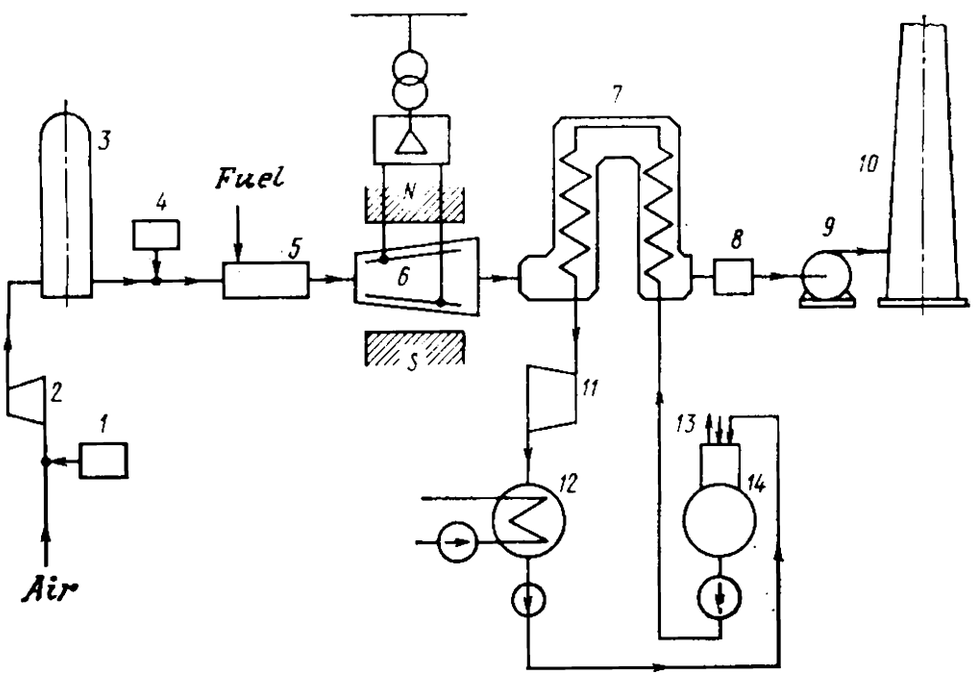

Fig. 154. Layout of MHD pilot plant У-*25*:
1—air-separation unit; *2*—blower; *3*—Cowper stove; *4*—system for introducing additives; *5*—combustion chamber; *6*—MHD generator; *7*—steam generator; *8*—additive removal system; *9*—smoke exhauster; *10*—chimney; *11*—steam turbine; *12*—condenser; *13*—deaerator; *14*—feed tank.

steam generator *7*. From gas ducts, gases flow through additive-removal system *8* and are discharged into the ambient by smoke exhauster *9* through chimney *10*. Steam generator delivers steam to turbine *11* and then to condenser *12*. Waste steam condensate flows through deaerator *13* to feed tank *14*.

Thermionic electrogenerators (TIG) are contactless converters of heat into electric energy. The operating principle of such a unit is based on the ability of metals heated to a high temperature to emit electrons from the surface.

Figure 155 shows the schematic diagram of a thermionic electrogenerator. Cathode *1* (emitter) heated to 1200-2000 °C emits an electron flow towards anode *2*. The gap between the cathode and the anode is filled with a gas or vapour of a metal (e.g. cesium). Such units can be combined with fuel elements of nuclear reactors or with

isotope heat sources. In combination with STP or GTP, the efficiency of TIG up to 50-60% can be attained.

Thermoelectric Generators (TEG). A thermoelectric generator is a battery of thermocouples (Fig. 156). When the hot junction is heated and the cold junction is cooled, electric current appears in the circuit. A TEG can be successfully combined with nuclear reactors. In the USSR, the thermoelectric generators Beta-1, Beta-C, Pinguin and Ether have been constructed, which utilize the heat from radio-isotopes. Such units are used as autonomous sources of electric power at radiometeorological stations, radar beacons, and

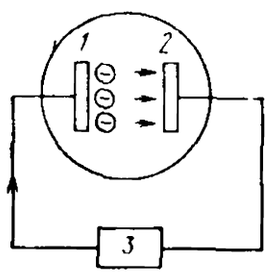

Fig. 155. Schematic diagram of thermionic electric generator: *1*—cathode; *2*—anode; *3*—load.

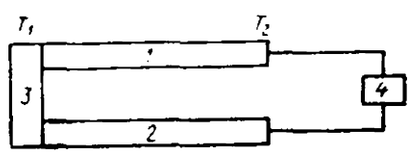

Fig. 156. Schematic diagram of a thermocouple: *1*—*n*-type semiconductor branch; *2*—*p*-type semiconductor branch; *3*—contact plate; *4*—load.

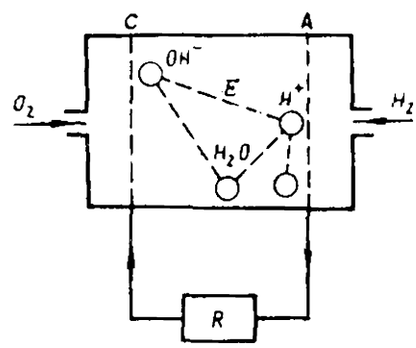

Fig. 157. Schematic diagram of a hydrogen-oxygen fuel cell.

high-mountain stations. Semiconductor TEG are used in cosmic laboratories. At present, the power of TIG and TEG is not high. High-power electric plants can employ only MHD methods of conversion of heat into electric energy.

Chemical Electrogenerators (CEG). In these units, the chemical energy of fuel is directly converted into electric energy. Chemical electrogenerators are fuel-cell batteries in which electrochemical (or cold) burning of fuel takes place.

Figure 157 shows the schematic diagram of a hydrogen-oxygen fuel cell. Electrolyte E (for example, KOH) is poured between oxygen cathode C and porous hydrogen anode A. Hydrogen molecules at the anode lose their electrons and pass to the electrolyte in the form of positive ions (H^+). As a result, the anode acquires a negative charge. Released electrons move in the external subcircuit to the cathode, where they are combined with oxygen atoms, forming negative ions (OH^-). These ions pass through the electrolyte to the anode, are combined with H^+ ions, forming water (H_2O). Fuel cells can be made on the basis of solid, liquid, or gaseous fuel. An example of a fuel cell based on metallic fuel is a Galvanic cell. The efficiency of fuel cells reaches 60%.

Test Questions

1. Which units are called steam-gas plants?
2. Name the basic systems of steam-gas plants.
3. What are the fields of application of steam-gas plants?
4. Which units are called atomic power plants?
5. Why is it necessary to employ two- and three-loop systems for APP?
6. Where and when was the first atomic power plant built?
7. Name the basic methods of direct conversion of thermal and chemical energy into electric energy.
8. What do we call an MHD generator?
9. How is the net efficiency of a combined unit including an MHD generator and a steam turbine plant determined?
10. Explain the operating principle of a thermionic electrogenerator.
11. What do we call a thermoelectric generator?
12. What is the operating principle of chemical electrogenerators?

Chapter Twenty Five

REFRIGERATING PLANTS AND THERMOCOMPRESSORS

25.1. Methods of Refrigeration

Refrigerating plants are used for refrigeration or heat removal from an object being cooled. Refrigerators can be used for lowering the temperature of bodies being cooled or for maintaining the temperature in a limited volume at a lower level than the ambient temperature. Refrigerating units are employed in all branches of national economy, including chemical industry.

The simplest and widely used method of refrigeration is based on the utilization of ice and snow, since their melting is accompanied by the absorption of 335 kJ of heat per kilogram. Under atmospheric pressure, ice and snow melt at 0 °C. Lower melting temperatures can be attained by mixing ice with some salts. The melting point of an ice-salt mixture depends on the concentration of salt in the mixture. As the salt concentration increases, the melting temperature of the mixture lowers to a certain minimum value, called the *cryohydric temperature*. With a further increase in the salt concentration, the melting point of the mixture increases. The cryohydrate temperature for the mixture of ice with common salt is equal to —21.2 °C for the salt concentration of 23.1%.

Low temperatures can also be attained by dissolving some salts in dilute solutions of acids as well as by using dry ice (solid carbon

dioxide), whose sublimation occurs at —78.9 °C. Each kilogram of dry ice absorbs 574 kJ of heat upon the transition to the gaseous state.

However, all methods of refrigeration considered above suffer from many drawbacks. When these methods are employed, a stock of materials is required, whose storage and transportation is fraught with certain difficulties. A modern refrigeration involves heat engines operating on the basis of the refrigeration cycle.

An ideal theoretical cycle of a refrigerator is a reverse Carnot cycle (see Fig. 12). Like a direct cycle (of heat engine), the reverse Carnot cycle consists of two isotherms and two adiabats.

The heat q_2 removed from the body being cooled is supplied in this cycle to a cooling agent (coolant) at a constant temperature T_2. Heat q_1 is removed at a higher temperature T_1. The coefficient of performance of a refrigerating machine based on the reverse Carnot cycle is given by

$$\varepsilon_c = q_2/(q_1 - q_2) = T_2/(T_1 - T_2).$$

It follows from this equation that the coefficient of the refrigerator performance increases with increasing temperature of the body being cooled and with decreasing the temperature of the medium which absorbs heat from the cold body. It should be taken into account that the absolute change in T_2 produces a stronger effect on the coefficient of refrigerator performance than a change in T_1.

The work spent for refrigeration is proportional to the removed heat and the temperature difference in the refrigerator and is inversely proportional to the absolute temperature of the body being cooled.

In accordance with the second law of thermodynamics, the heat removed during refrigeration cannot spontaneously pass from a cold body to the surrounding medium which is at a higher temperature. In order to transfer heat from a cold body to a hot body, it is necessary to spend energy from an external source. The heat removed from the body being cooled (in a limited volume) in a cycle of a refrigerating machine is absorbed by a cooling agent (coolant) whose temperature is below that of the body (volume) being cooled. The low temperature of the coolant is attained as a result of evaporation (boiling). The heat removed by the coolant is transferred to the cooling medium, the coolant vapour condenses and is again fed to the evaporator. The condensation of the coolant vapour occurs at a higher pressure and temperature than those in the evaporator. In order to realize such a heat transfer, work should be done, which is then also converted into heat and is transferred to the ambient.

Figure 158 shows the schematic diagram of a refrigerator. It can

be seen from the diagram that the heat removed is

$$Q_r = Q_0 + L.$$

Refrigerating plants are divided into those intended for cooling to —180 °C, the units for cooling to —270 °C, and the ones for obtaining ultralow temperatures (below —270 °C). The plants for deep refrigeration at ultralow temperatures are used in experimental technology for liquefaction of gases.

The units for moderate cooling (to —180 °C) are used in transport, building construction, medicine, trade, etc. Refrigerating units are widely used in chemical industry for obtaining plastics, artificial fibres, etc.

Depending on the operation principle, the units for moderate refrigeration are divided into compression cooling plants where a certain amount of mechanical work should be done, absorption refrigerating plants and steam-jet cooling plants, which utilize heat for refrigeration.

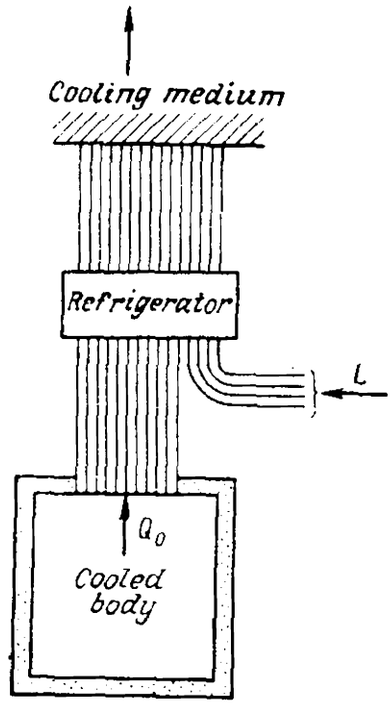

Fig. 158. Schematic diagram of a refrigerator.

Essentially, a refrigerator is a pump intended for pumping heat from a cold body to a hot one. In an ordinary refrigeration cycle, the ambient is a hot body and the medium in the refrigerator chamber is a cold body. In the case when the ambient is a cold body, and heat is pumped from the ambient to a hot body, the unit is called a *thermocompressor*.

25.2. Cooling Agents

Cooling agents are the substances used in refrigerators as working fluids for heat transport from cold to hot bodies.

A coolant should satisfy a number of requirements among which thermodynamic, physico-chemical, economical and physiological conditions can be singled out. Coolants must have a high volumetric cooling capacity. The boiling pressure of a coolant should be higher than the atmospheric pressure, and its pressure at the end of compression should not be high.

A coolant must have a high heat of evaporation and moderate density and viscosity. It is desirable that coolants be soluble in

water and insoluble in oil. Coolants must be neutral with respect to metals and insulating materials of refrigerators, explosion-proof and incombustible. They should have a typical scent and colour to reveal a leakage. Coolants must be available and meet industrial sanitation requirements, i.e. they should not cause asphyxia, poisoning, irritation of mucous membranes of eyes and respiratory system.

Water, ammonia, sulphur dioxide, methyl chloride and carbon dioxide serve as coolants. The most abundant coolants are ammonia and freons. Water is used in steam-jet cooling and lithium bromide absorption refrigerating plants.

Ammonia NH_3. Due to its thermodynamic properties, ammonia is the most abundant coolant. Its boiling point under the atmospheric pressure is —33.4 °C, the freezing point being —77.7 °C and the critical temperature +132.4 °C. The volumetric cooling capacity is equal to 2166 kJ/m^3 at t_0 = —15 °C and t_f = +30 °C.

Ammonia is readily soluble in water and hardly soluble in oil. It does not form chemical compounds with ferrous metals, aluminium, and phosphor bronze. Ammonia is a colourless gas with a pungent, suffocating smell. Ammonia-air mixture with 16 to 25% ammonia by volume is highly explosive. Ammonia is mainly used in positive displacement refrigerators for t_f above 40 °C and t_0 below —60 °C, as well as in absorption-type refrigerating systems with water as a solvent.

Freons. Freons are fluoric and chloride derivatives of saturated hydrocarbons. The most abundant freons are Freon-11 ($CFCl_3$), Freon-12 (CF_2Cl_2), Freon-13 (CF_3Cl), Freon-14 (CF_4), Freon-22 (CHF_2Cl), Freon-113 ($C_2F_3Cl_3$), and Freon-142 ($C_2H_3F_2Cl$). The physical properties of freons vary depending on the number of fluorine, chlorine and hydrogen atoms. The larger the number of fluorine atoms, the lower the toxicity of the freon and its reactivity to metals. With increasing number of fluorine atoms, the solubility of freon in oil and water decreases and its chemical stability increases. Freons containing no hydrogen atoms are neither inflammable nor combustible. The main advantage of the utilization of freons as coolants is that they are relatively harmless, chemically inert, incombustible and explosion-proof. Their disadvantages include low viscosity facilitating leakage and their high solubility in oil.

Carbon dioxide is a colourless gas without smell, neutral with respect to metals and lubricants. Under the atmospheric pressure, it boils at —79 °C. Carbon dioxide has a high condensation pressure ranging from 5.9 to 6.9 MPa depending on the temperature of the ambient. Carbon dioxide boils at —30 °C under the pressure of 1.3 MPa. Consequently, all parts of a CO_2 refrigerating plant should operate under a high pressure, which complicates its design and increases its weight.

If a refrigerating machine is intended for several loads (objects),

brine-cooling systems are employed. In such systems, the brine serves an intermediate cooling agent. Sodium chloride and calcium chloride brines are used as coolants. The brines are used at the temperatures below —12 °C for NaCl and below —21.2 °C for $CaCl_2$. Aqueous solution of diethylene glycol and Freon-30 are also used as coolants in such machines.

25.3. Air Coolers

Plants of this type are based on the cooling caused by the expansion of compressed air. Figure 159 shows a schematic diagram of an air cooler. Air is compressed in compressor *1* from the initial pressure p_0 (and temperature T_0) to the pressure p_f. The temperature T_f of air at the end of compression will be much higher than the temperature of the ambient. Compressed air enters heat exchanger *2* where it is cooled by the surrounding air or water to temperature T_3, releasing heat Q_1.

Compressed and cooled air is fed to expander *3* where it expands to the initial pressure p_0. In the process of expansion, air temperature drops to the value which is considerably lower than the temperature of the ambient. Cold air flows from the expander into premises *4* being cooled, cools the objects contained in this volume, receives heat Q_2 from them, is heated to temperature T_1 and again flows to the compressor.

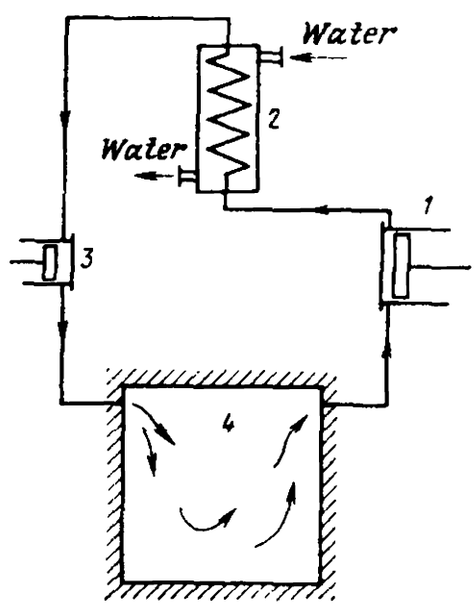

Fig. 159. Schematic diagram of an air cooler:
1—compressor; *2*—heat exchanger; *3*—expander; *4*—premises being cooled.

Figure 160 shows the theoretical cycle of an air-cooling plant in the *p-v* coordinates, while Fig. 161 shows the same cycle in the *T-s* coordinates. Curve *5-1* characterizes air suction into the compressor, curve *1-2* describes compression, curve *2-6* corresponds to air discharge from the compressor to heat exchanger, curve *3-4* to adiabatic expansion, curve *3-6* to air entering the expander, while curve *5-4* characterizes air outflow from the expander.

Area $F_{5-1-2-6}$ is equivalent to the work spent for driving the compressor, while area $F_{6-3-4-5}$ is numerically equal to the work done in the expander. The work spent for completing a cycle is equal to the difference in the work l_{com} done by the compressor and the work l_{ex}

by the expander:

$$l_c = l_{com} - l_{ex}.$$

The coefficient of performance of an air refrigerating machine is given by

$$\varepsilon = T_1 (T_2 - T_1) = T_4/(T_3 - T_4).$$

The temperature T_3 is determined by the temperature of cooling water, while temperature T_1, by the temperature in the room being

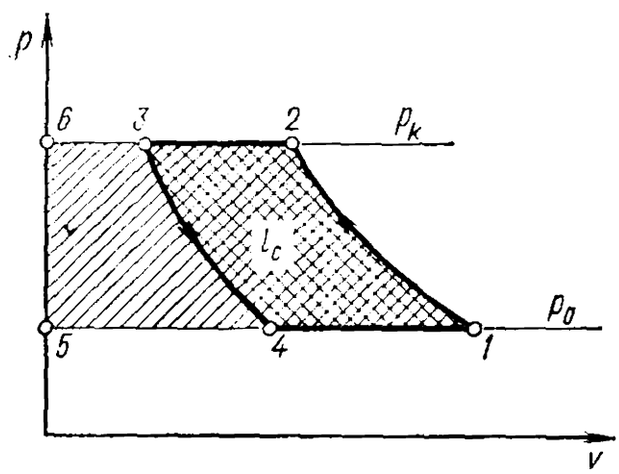

Fig. 160. Theoretical cycle of an air-cooling plant in the p-v coordinates.

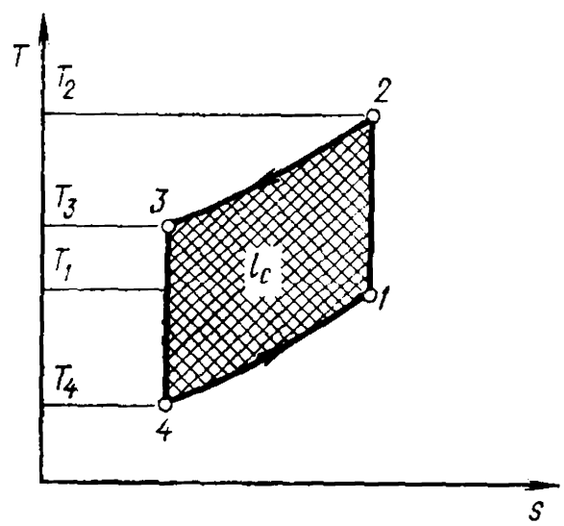

Fig. 161. Theoretical cycle of an air-cooling plant in the T-s coordinates.

cooled. The energy losses in the compressor and expander are responsible for a low actual commercial efficiency of air refrigerating units.

The main advantages of air refrigerating machines is that the coolant (air) is the most harmless and available substance.

When high-speed turbo-compressors and turbo-expanders are employed, air refrigerators are quite compact and have not very large mass.

25.4. Vapour Compression Refrigerating Plants

The schematic diagram of a compression refrigerating plant is shown in Fig. 162. A coolant boils in evaporator *1* under a low pressure. This process is accompanied by heat absorption from the body (volume) being cooled. Moist vapour of the coolant is admitted and compressed adiabatically by compressor *2*, after which it is fed to condenser *3* at a higher pressure (and temperature). The condensate of the coolant is passed through reducing control valve *4*, in which its pressure drops to the value corresponding to the suction pressure

in the compressor. Then the coolant is again sent to the evaporator. This system does not contain an expander. It is replaced by reducing control valve *4*, since after the pressure drop the pressure of the condensate is very low due to its small volume. The use of an expander would only complicate the layout.

If the processes of compression of the coolant vapour (region *1-2*) and pressure drop of condensate in the reducing control valve (region *3-4*) are adiabatic, the theoretical cycle of vapour compression unit is identical to a reverse Carnot cycle, since the processes of evaporation (region *4-1*) and condensation of the coolant (region *2-3*) occur not only under a constant pressure but at a constant temperature as well. Therefore vapour compression plants have a higher coefficient of performance than air refrigerating plants. Since the specific heat of vapour is much higher than the specific heat of air, vapour refrigerating machines have higher coefficients of performance and smaller overall dimensions.

The branches *A-K* and *B-K* correspond to the boundary curves for liquid and vapour on the *p-v* diagram of evaporation of the coolant. If we denote the temperature in the evaporator by T_1 and the condenser temperature by T_2, the coefficient of performance of a vapour compression refrigerating machine will be

$$\varepsilon_v = T_2/(T_1 - T_2).$$

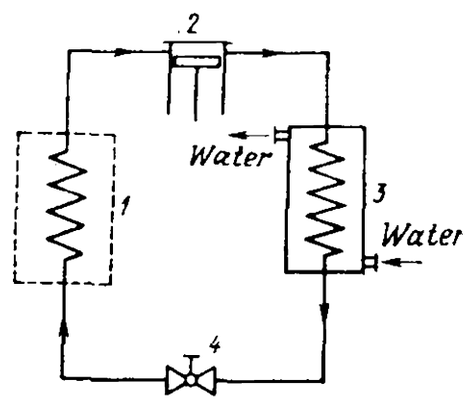

Fig. 162. Schematic diagram of a compression refrigerating plant: *1*—evaporator; *2*—compressor; *3*—condenser; *4*—reducing control valve.

The performance of a compression refrigerating machine with the compression of moist vapour in a compressor has a number of disadvantages, mainly connected with the possibility of a hydraulic shock in the compressor and a significant heat transfer from the moist vapour to the walls of the compressor and pipelines.

Moist vapour remaining in the clearance volume of the compressor at the beginning of suction expands, the drops of the condensate are evaporated, which prevents from the admission of new portions of condensate into the compressor. A transition from the compression of moist vapour to the compression of dry saturated vapour (to the so-called dry compression stroke) eliminates the possibility of a hydraulic shock and increases the capacity of the compressor by 20-25%.

If a dry saturated vapour enters the compressor, it becomes superheated by the end of compression. In the condenser, the vapour is cooled to the saturation (condensation) temperature and then con-

denses. The theoretical cycle *1'-2'-3-4-1'* shown in dashed lines in Fig. 163, corresponds to the dry stroke of the vapour compression refrigerating plant.

The coefficient of performance of dry-compression refrigerating machine is somewhat higher, but at the same time the power expenditures for vapour compression are also higher. As a result, the theoretical value of the coefficient of performance becomes somewhat lower. An increase in the refrigerator capacity and a decrease in the heat-transfer losses make the commercial efficiency of a real cycle with a dry stroke higher than in the case of moist vapour compression.

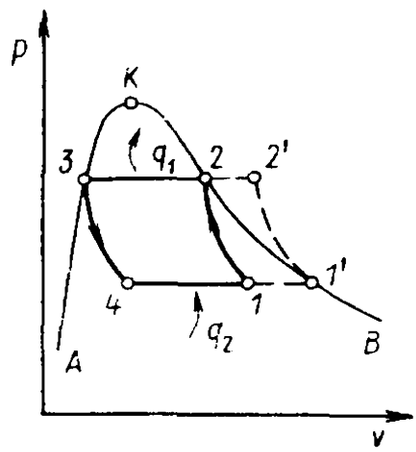

Fig. 163. Theoretical compression-refrigeration cycle in the p-v coordinates.

If a dry-compression refrigerating machine operates in a wide temperature range, when the boiling temperature in the evaporator is below —25 °C, the pressure ratio in the compressor and the temperature of coolant after the compression become higher. This leads to a decrease in the capacity of the compressor and to considerable heat losses in the condenser during the cooling of compressed vapour to the condensation temperature. For this reason, for $w > 8$ a two-stage compression of the coolant with intermediate cooling is employed.

The choice of pressure in the evaporator and condenser, i.e., in front of and behind the compressor, is made with the help of special tables according to the minimal temperature which must be maintained in the refrigerating chamber and the temperature of the coolant (air or water) in the condenser. For example, if the parameters of an ammonia refrigerating plant with air cooling of the condenser at the temperature of +20 °C are determined for the temperature in the refrigerating chamber of —12 °C, the pressure in the evaporator should be below 0.273 MPa, while in the condenser it must be higher than 0.874 MPa, since these values of pressure and the corresponding values of temperature are the parameters of boiling and condensation.

25.5. Absorption Refrigerating Machines

A piston compressor and its drive are the most complicated units in a compression refrigerating plant from the point of view of its design and maintenance. The possibility of creating a refrigerating

plant without a mechanical compressor, and hence without a drive, has been studied long ago. In 1862, Korre proposed the so-called absorption refrigerating unit based on a thermochemical cycle, for whose performance the expenditures of heat are required rather than mechanical work.

The distinctive feature of an absorption refrigerating machine is the utilization of a thermochemical and not mechanical compressor for coolant vapour. A water-ammonia solution in which ammonia plays the role of a coolant and water serves as an absorbent is widely used as a working fluid in absorption units. One of the working fluids playing the role of a coolant should have a low boiling point and be dissolved or absorbed by the other working fluid which may be either liquid or solid. The substance absorbing the coolant is called the absorbent.

The schematic diagram of the simplest absorption refrigerating machine is shown in Fig. 164. When heat Q' is supplied from outside a coolant is vaporized from the concentrated ammonia solution in generator *1* under a maximum pressure in the system. Ammonia obtained from the water-ammonia solution is fed to condenser *2*, where it is condensed under the same pressure, releasing heat Q_1. A weak water-ammonia solution is delivered through control valve *7* to absorber *5* where it is enriched by ammonia. Liquid ammonia from condenser *2* passes through reducing valve *3* to evaporator *4*, in which the pressure is considerably lower than in generator *1* and condenser *2*. Ammonia boils in the evaporator and absorbs heat Q_2 from the body (or the room) being cooled. Ammonia vapour is fed from the evaporator to absorber *5*, where it is absorbed by a weak water-ammonia solution flowing through control valve *7* from generator *1*. The process in the absorber is accompanied by the liberation of heat and occurs at a pressure which is minimum for the system. The intensive absorption of ammonia in the absorber as if sucks ammonia vapour from the evaporator, thus maintaining continuous boiling in it. Heat Q'' liberated in the absorber is absorbed by a cooling system (with air or water as a coolant).

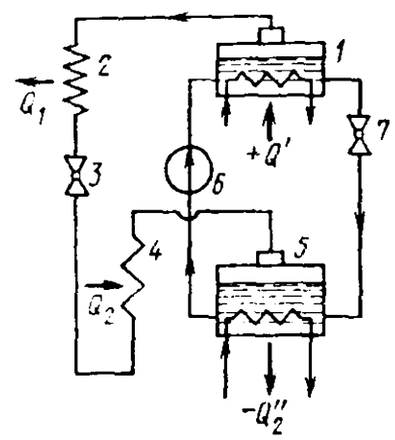

Fig. 164. Schematic diagram of an absorption refrigerating machine:
1—generator; *2*—condenser; *3*—reducing valve; *4*—evaporator; *5*—absorber; *6*—pump; *7*—control valve.

Since the pressure in the generator is much higher than in the absorber, the ammonia vapour flow through the generator to the condenser and then the condensate flow through the control valve to the evaporator, as well as the flow of a weak solution from the

generator to the absorber are spontaneous flows due to the pressure drop. The pumping of a strong water-ammonia solution from the absorber to the generator is performed by pump *6*. Consequently, a much smaller amount of mechanical energy is required for driving the pump of the absorption refrigerating machine than for driving the compressor.

If an absorption machine is intended for operation with a small pressure drop between the generator and the absorber, it may contain no pump. In this case, the water-ammonia solution flows due to the difference in its densities in different regions of the circulation circuit, i.e. the so-called thermal circulation is used.

Low-capacity absorption refrigerating units without compressors are widely used in domestic refrigerators.

Absorption refrigerators have a number of advantages over compression refrigerators. One of the main advantages is the possibility of using the heat from steam, hot water or flue gases. Other advantages are low consumption of electric energy for driving the pump and the absence of a compressor and wearable joints.

The main drawbacks of absorption machines in comparison with compression units are large overall dimensions and mass, a considerable consumption of cooling water and heat per unit heat removed from the system. When such a plant operates with an electric heater (when it is impossible to utilize cheap heat from steam or hot water), the commercial efficiency of the absorption refrigerator is considerably lower than that of a compression counterpart.

Refrigerating machines considered above can operate as thermocompressors. In this case, the useful heat is the heat removed: $Q_r = Q_0 + L$. The coefficient of performance of a thermocompressor is given by

$$\mu = (Q_0 + L)/L = 1 + Q_0/L = 1 + \varepsilon$$

and is always greater than unity.

Test Questions

1. Where and for which purposes are refrigerating machines used?
2. Which methods of refrigeration do you know?
3. List the basic types of coolants and describe their properties.
4. Which ideal cycle is used in refrigerating machines?
5. How can we determine the coefficient of performance of a refrigerating machine?
6. Into which three groups are refrigerating machines divided?
7. Describe the construction of an air refrigerating machine.

8. Which refrigerating machines belong to vapour compression type?

9. What is the operating principle of the absorption refrigerating machine?

10. What are the advantages of absorption refrigerating machines over compression units?

11. What do we call a thermocompressor?